广州数控设备有限公司
GSK CNC EQUIPMENT CO., LTD.

Add: No.7, 1st. Street, Luochong North Road, Luochongwei, Guangzhou, 510165, China
Http://www.gsk.com.cn E-mail:sale1@gsk.com.cn
Tel: 86-20-81796410/81797922 Fax: 86-20-81993683

Mar. 2010/ Edition 1
Sep. 2010/ Printing 1

GSK 928GE/GA Grinding Machine CNC System User Manual

GUANGZHOU
CHINA

USER MANUAL

GSK 928 GE/GA Grinding Machine CNC System

广州数控设备有限公司
GSK CNC EQUIPMENT CO., LTD.

In this manual, we have tried as much as possible to describe all the various matters about the system. However, we can not describe all the matters which must not be done or which can not be done because there are so many possibilities. Therefore, matters which are not especially described in this manual should be regarded as “impossible” or “forbidden”.

PREFACE

Dear user:

It’s our great pleasure that you select **GSK928GA/GE** surface/cylindrical grinding machine CNC system (hereinafter referred to as system).

This manual is divided as three parts: the operation, the programming and PLC programming chapters, which introduces CNC basic operation, programming and the installation, connection and setting of the system, and also lists some examples, which can be taken as the reference for the programmer.

This manual applies to the software (V3.1 or the above version) of **GSK928GA/GE** surface/ cylindrical grinding machine CNC system. Before programming, please read the manual carefully.

This manual covers the content of using the system and the precautions.

SAFETY PRECAUTIONS

The incorrect operation may cause the accident, so before using the system, please read the manual carefully!

Before using the system, please pay attention to the following matters.

- Connect the emergency button of the system. Because the emergence stop input is the normally closed contact, if the button isn't connected or it's the normally open contact, the system will alarm and not work after the system is turned on. Note: It's not the system malfunction.
- Set the reference position based on the tool actual installed position. The accidence may happen if the reference position return function is used without setting the reference position.

Note: The system power supply installed on/in the cabinet is dedicated for GSK CNC system.

It's forbidden that the user uses the power supply as the other purpose, otherwise, it may cause the great hazard.

RESPONSIBILITY

Responsibility of the manufacturer

——The manufacturer should be in charge of the design and the structure of CNC system and the its accessories.

——The manufacturer should be responsible for the safety of CNC system and its accessories.

——The manufacturer should be in charge of the information and suggestion providing for the user.

Responsibility of the end user

——The user should be very familiar with the safety operation through learning CNC system or participating in the training session.

——The user should be responsible for the safety after adding, changing or modifying the original CNC system or its accessories.

——The user should be in charge of the danger resulted from the operation, adjusting, maintenance, installation and storage which are not complied with the manual stipulation.

All specifications and designs are subject to change without notice.

The manual is kept by the end user.

Thank you for your friendly support during using GSK product.

CONTENTS

SECTION Ⅰ OPERATION

Introduce the operation, installation, connection and parameter setting of GSK928GA/GE system.

CHAPTER 1 SYSTEM OVERVIEW

1.1 Introduction of the system

1.1.1 Introduction of GSK928GA/GE system

GSK928GA/GE surface/cylindrical grinding machine CNC system is developed by the GSK CNC EQUIPMENT CO., LTD. It is a product of new type with embedded DSP+MCU control, LCD and complete keypads panel.

GSK928GA/GE uses blue LCD, international standard CNC language—ISO code part program and includes standard G and M code. It is embedded with the software PLC, and matches with the various servo drive units. The precision control and prompt reaches the level. Display in μm precision and control, with full screen program, simple operation, openness, compact structure, convenient maintenance, high precision, reliability and expansibility, which can be used as the multi-functional CNC system of grinding machine.

1.1.2 Main function and performance

Main function of controller and technical index:

(1) Number of axes in the controller: Two three axes, including the servo spindle;

(2) S curve line can automatic increase and reduce speed, full closed AC servo control, and realizing the machine closed-loop control;

(3) Electronic MPG functions; (able to support external extended MPG.)

(4) Minimum prompt and setting unit:0.001mm;

(5) Standard stroke range: ±8000 mm;

(6) Rapid traverse rate: 0~8000mm/min;

(7) Built-in PLC software: input 32 points; output 24 points (isolated by photo electricity);

(8) Standard ISO code block, relative / absolute programming;

(9) Macro variable programming (100 floating points macro variables,40 integer macro points);

(10) Number of the storable part programs:100;

(11) IO interface and M code programming design only for grinding machine;

(12) Automatic grinding wheel correcting and compensation function of grinding dimension which is specified by the machine manufacturer;

(13) Special application for the slow feeding and design of stable speed during grinding;

(14) Protection of position overrun; overtravel protection of software/hardware overtravel; drive alarm detection;

(15) Convenient and friendly parameter input method of grinding;

(16) Built-in RS-232C interface with PC for communication;

(17) Angular axis function only for grinding machine and the adjustable angle of angular axis from 0 to 45°;

(18) External measuring tool control function;

(19) Protection of rapid retraction in grinding machine;

(20) System parameter, automatic backup of PLC user program and read function;

(21) Servo spindle control, analog spindle, rotation axis graduation and orientation function.

1.1.3 The differences between GSK928GA and GSK928GE

GSK928GA and GSK928GE are the products of GSK with its own intellectual property. GSK928GA is CNC system of the surface grinding machine; GSK928GE is CNC system of the cylindrical grinding machine.

About them, except the definitions of the coordinate systems and I/O definitions are different, other operations, programming and PLC control mode are exactly same. And the manual takes GSK928GE as the example to introduce the operation of grinding machine CNC system.

1.1.3.1 The differences between the coordinate systems

Based on the Cartesian coordinate system, the coordinate system of GSK928GA CNC system is Y/Z one, X is normally the hydraulic control axis without displaying the position; while the coordinate system of GSK928GE CNC system is X/Z one. The coordinate system is shown as the following figures:

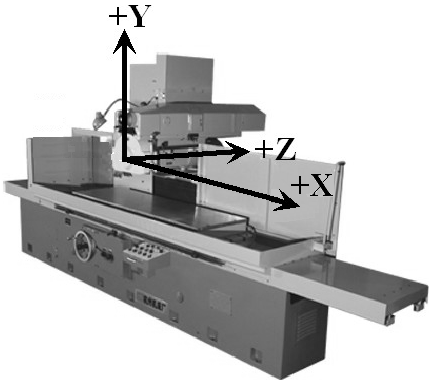

Fig. 1-1 The machine coordinate system of the surface grinding machine

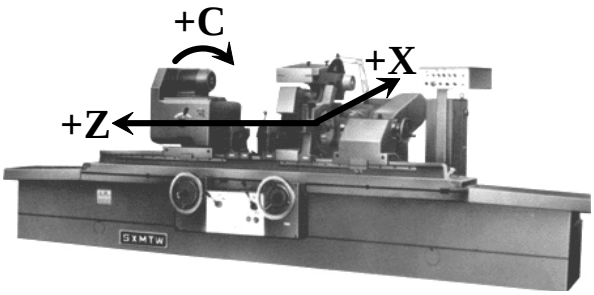

Fig.1-2 The machine coordinate system of the cylindrical grinding machine

Moreover, the outer grinding machine belongs to the rotational machine. The cross section of its work piece is normally round, and the dimensions marked on the machining drawing are diameter and the radius. For the user to edit the machining program based on the machining drawing of the part, GSK928GE cylindrical grinding machine CNC system provides the radius and diameter programming. However, the part drawing of the surface grinding machine doesn't have the problem of the diameter dimension, therefore, GSK928GA only provides the radius programming.

1.1.3.2 Differences between I/O interface definitions

About GSK928GA and GSK928GE, I/O interface definition corresponds to PLC address. The tool clamp of the surface grinding machine is the electromagnetic chuck, while that of the outer grinding machine is the head and tail stocks. Therefore, in PLC definitions, Head stock is displayed on the status bar of GSK928GE cylindrical grinding machine CNC system, while Chuck is displayed on the status bar of GSK928GA surface grinding machine; Head stock motor control and Head stock motor

alarm are defined in PLC of GSK928GE, while Electromagnetic chuck magnet control and Electromagnetic chuck alarm are defined in GSK928GA, which are shown as the following figures:

1.2 Introduction of system operation panels

Fig. 1-3 Introduction of system operation panel

(1) LCD monitor: The top left part of the system is blue LCD, the resolution is 320 X 240 lattices, which is for prompt of Chinese menu status of system, operational information and fault alarm.

(2) Operation panel: The key is set, according to customer's requirement, and control the machine to finish the various accessorial function and basic operation;

(3) Address keys: English letter input of part program field address;

(4) Functional keys: Various graphic symbol function key is set according to *CNN machine graphic symbols*;

1.2.1 Introduction of the address keypad panel

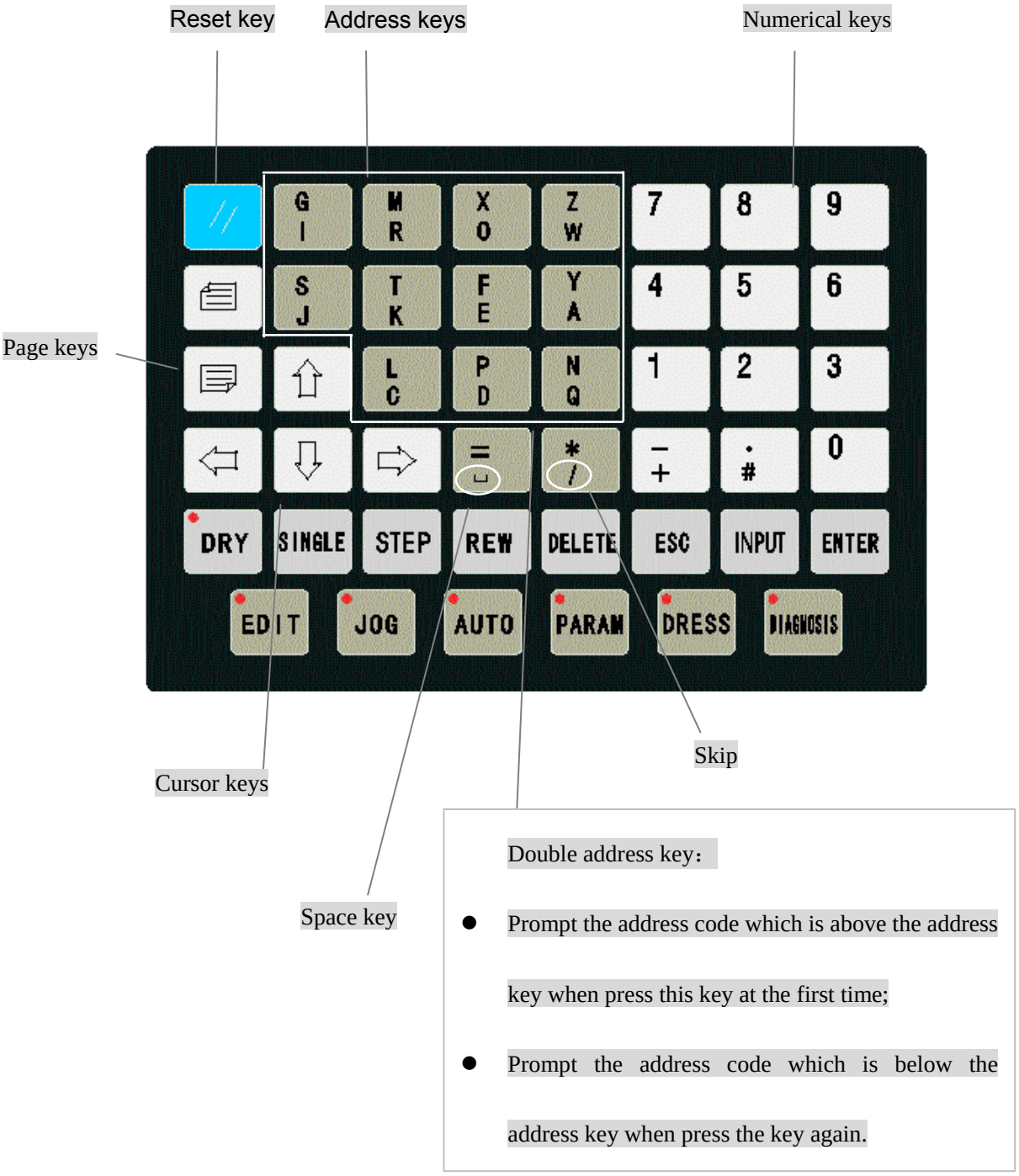

Fig. 1-4 Address keypad panel

(1) Reset key

System reset key

All the movement of shaft stops when the system resets. All axis output function doesn't work, and the machine stops running and prompts electrified status.

(2) Page keys:

Page up:

Turn a page up to search the program or parameter in the Edit/Para (parameter) mode. Change the type of displayed coordinate system in Auto/Jog mode.

Page down:

Turn a page down to search the program or parameter in the Edit/Para (parameter) mode. Display/hide the follow error in Auto/Jog mode.

（3）Cursor control keys

The cursor moves upward:

Move the cursor to one upper row in the Edit/Para mode. The brightness of LCD is enhanced in Jog mode.

The cursor moves downward:

Move the cursor to the next row in Edit/Para mode. The brightness of LCD fades in Jog mode.

The cursor moves left:

Move the cursor to left in a character space in Edit mode. Delete the last input figures during the status of data input.

The cursor moves right:

The cursor moves to right in a character space in Edit mode.

（4）Address key

Input the English letter of the part program field address.

1.2.2 Introduction of the panel with function keys

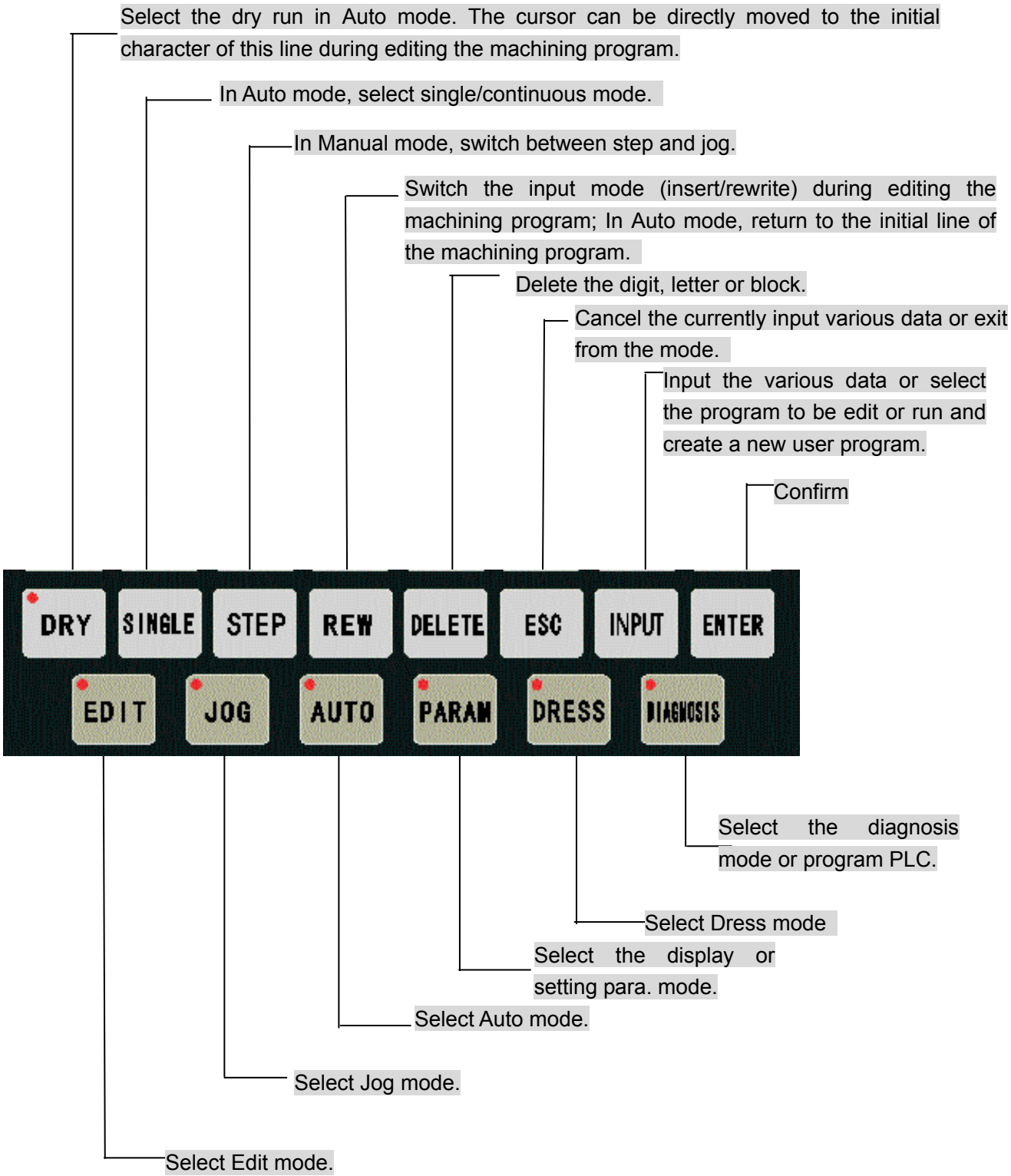

Fig. 1-5 Panel of function keys

1.2.3 Introduction of the machine operation panel

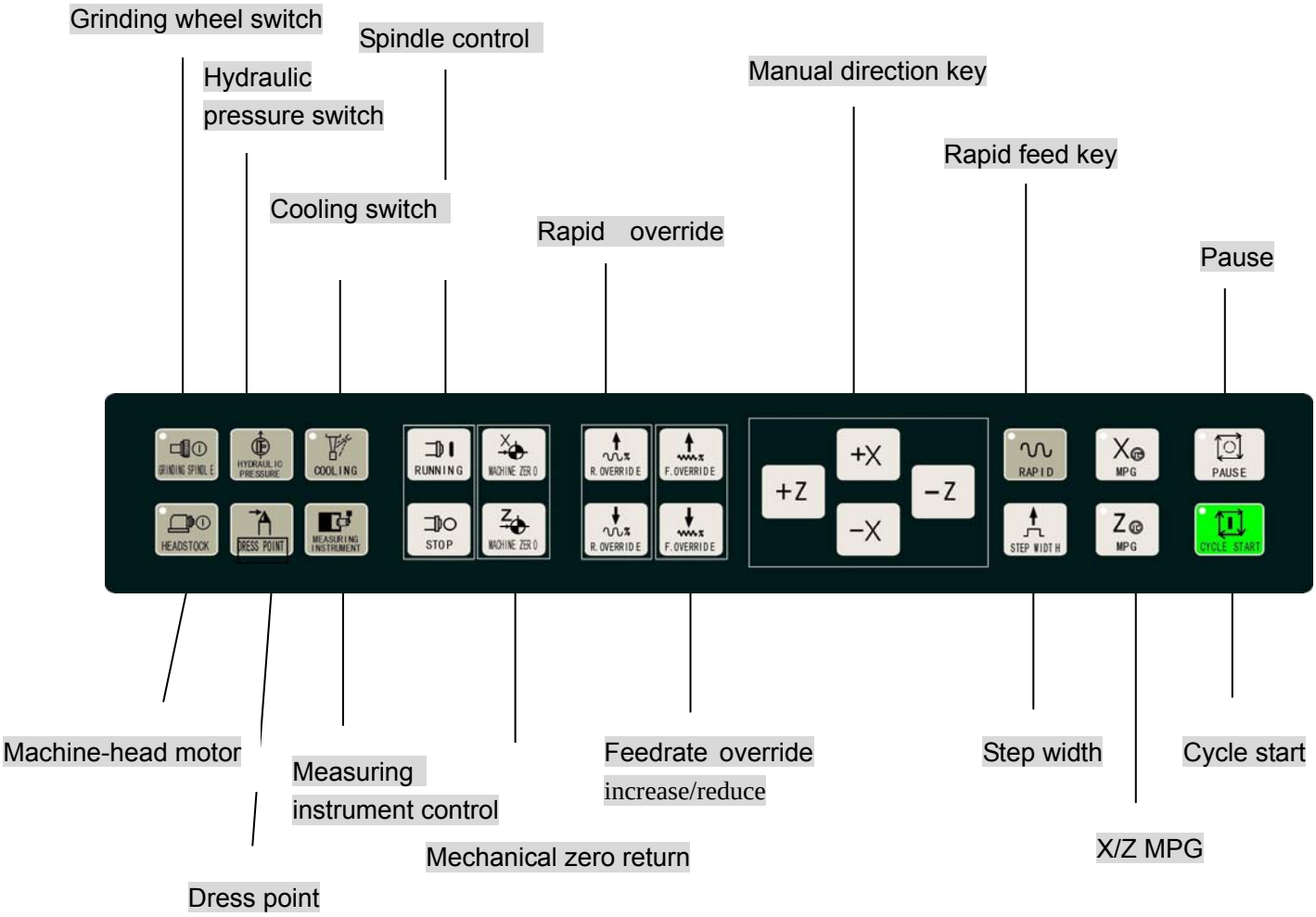

Fig. 1-6 Machine operation panel

CHAPTER 2 SYSTEM BASIC OPERATION

2.1 System power on/off

After connecting the external power supply, switch on the main power supply of machine. During the situation, the machine is not started. Press the *start* button in the accessorial machine operation panel of GSK928GE grinding machine CNC system and turn on the power supply of CNC system and external drive. After system detects each configuration work is OK, then, the machine is allowed to operate.

2.1.1 Power on

The steps of turning on CNC system:

1. Switch on the main switch of power supply, and turn on the system.

(1) System starting initialization

After switching on the system and initializing at the first time, the screen is displayed the version numbers of software and hardware, which is shown in the right figure:

After initializing the system, the system checks PLC program. If PLC program is not correct, the system shows the start-up screen and press any keys except reset key , the system comes into debugging mode, then, the movement function does not work. If PLC program is OK, the system starts initializing DSP.

（2）DSP initialization

After the system initializes at the first step, and PLC program is normal, it initializes DSP, if it is normal, and the screen is displayed **"INITIALIZING DSP……OK!"**

The start-up screen prompts when finish starting the system.

If DSP initialization fails, the screen shows:

Press ENTER, the system tries to initialize DSP again. Press other key, the system comes into debugging mode and shows the start-up screen.

2. After system finishes initializing, the screen Shows the trademark of *GSK*, and press any key except reset key //, the system comes into working mode.

2.1.2 Debugging mode

If any mistake in PLC program or failure of DSP initialization at the start stage, the system enters debugging mode. When emergency stop alarms, press DELETE for 5 seconds, the system enters debugging mode. The movement function of the system does not work in the debugging mode, and the system can not execute the relevant operation regarding to movement. The user can debug the system, find the fault, and modify the parameter, the machining and PLC programs. In Jog/ Auto mode, the system reminds the users that the system enters debugging by displaying the "debugging" in the status bar under the working mode.

As above figure shows, in the debugging mode, the user can modify PLC program in the diagnose mode. After detection of PLC program, press // and restart the system, it enters working mode.

2.1.3 Power off

(1) Press the switch of CNC power supply, cut off power supply, and the system turns off.

(2) Cut off the machine main switch of power supply.

2.1.4 Initializing CNC system

If power on the system at the first time, the initialization is operated according to the following steps:

Press and hold // and DELETE at the same time, first release //, after 3 seconds, then release DELETE, the system completes the parameter initialization. Then, the parameter of the machine is set as internal initialization of CNC system; refer to introduction of parameter about the details.

Initialization of system space:

●If the password is right, enter Edit mode, press INPUT and input "-01", then press DELETE, it reminds *Sure to delete program?* And press ENTER to specify.

Initialization of system PLC:

●If the password is right, enter diagnosis state, then press DELETE for two seconds and it reminds PLC initialization completes!

2.2 Machine zero return (HOME)

Every machine sets one point as its zero point. After power on or reset each time, the worktable can return to the zero point of machine, and return to the machining start point, then, the cumulative errors are eliminated. The worktable returns to the machine's zero point before machining, then, specify the start point of machining and record the coordinate system of the machining start point which was recorded last time. After power off each time, the machine returns to the zero point and then comes to the machining start point which was recorded last time; finally, the program starts. Therefore, it can avoid the situation that the system coordinate system is not consistent with the actual position which may be moved by the operators after power off, and the accident may occur if the program starts without specifying the machining start point after power on the machine.

The function is that "whether it must return zero after CNC system power on, again or resetting, and then execute machining through selecting the parameter. Regarding to the details, refer to Bit 4 and 5 in the parameter 3.

X MACHINE ZER O Return to zero point of machine X axis

Press X MACHINE ZER O in Jog mode, the system prompts "X back to zero?"

Press CYCLE START, X axis rapidly returns to the machine zero point at rapid feedrate which is set in the parameter.

Z MACHINE ZER O Return to zero point of machine Z axis

Press Z MACHINE ZER O in Jog mode, the system prompts "*Z back to zero?*"

Press CYCLE START, Z axis returns to the machine zero point at rapid speed which is set in the parameter.

Regarding to the method and process of the return to machine zero point, refer to 6.1.5.1.

REMARK

1. The movement direction of machine returning to zero point is set by parameter Home Polar X and Home Polar Z of parameter P041. The grinding wheel base should be kept at the reverse direction of the switch during machine returns to the zero point.

2. Without the reference position switch on the machine, do not use the function of machine returning to zero function, otherwise, accident may occur because the grinding wheel base is moving at the high speed all the time without switch for reducing the speed.

3. Pay attention to it that during the machine return to zero, firstly the machine tries to return the X axis where the grinding wheel motor is installed and the switch should be fit in the other side which is far away from the Z axis work table.

2.3 Emergency stop

There is an external emergency input port in the system input interface. The user should connect the *normally closed contract point*, which is on the emergency stop of the red mushroom on the machine panel, with the emergency input port. In the emergency situation, please press the *emergency stop*, the system enters emergent status; all the feeds stop, and the spindle of grinding wheel, switching value control and so on are edited by user through PLC. For safety, spindle and relevant equipment are closed. About the editing mode, refer to some chapters of *PLC program section*. The screen flickers and prompts as the figure 2.1 shows:

Fig. 2-1 Emergency stop alarm

Rotate the emergency switch according to the direction of an arrow, the emergency stop button automatic springs up, then, press the reset key and restart the system, the system can come back to the normal working status. If the system has no external emergency stop button, when the emergency stop alarms, press DELETE for a while, the system can enter the debugging mode. Then, modify PLC program, take the inverse value of the emergency stop signal and restart the system.

2.4 Alarm

2.4.1 Limit switch alarm

The system can check limit switches if the machine has installed. When the socket is moved and the limit switch is pressed, the feeding stops but other miscellaneous function is still on, the program stops running, and the grinding wheel spindle and switching value control and so on are set by the user through PLC editing. When it alarms, the limit switch alarm information of corresponding axes is displayed at the top right corner.

After the limit switch alarms, Jog mode can be selected. Press "cancel limit", meanwhile, press the manual feeding key or enter MPG operation, which is opposite to the limit direction, then, exit the limit and the limit switch alarm automatically exits from the screen.

2.4.2 Software limit alarm

The system sets the limit range, and if the machine exceeds the setting value, the system reminds axis software limit alarm, at the same time, press "limit release" and the corresponding direction keys, it moves again. If it still exceeds the limit setting value, the machine can not respond in the exceeded range.

2.4.3 Emergency retraction alarm

Using axis emergency retraction function can solve the problem of emergency retraction, and cancel the alarm by releasing the limit key.

2.4.4 Drive unit alarm

When the alarm output signal of drive connects with CNC system and drive alarms, the system cuts off all feeding operation automatically, and the screen also prompt *X axis drive alarm* or *Z axis drive alarm*. The system stops running and closes the entire output signal which is specified by PLC. Please check the drive and relevant connection，shoot trouble and switch on again.

2.4.5 Other alarms

It prompts in the screen in Chinese if CNC system alarms, and then it can be dealt with based on the message. When many alarms occur at the same time, the system prompts in interval of 3 seconds, and also calls the alarm information through pressing page down key in the diagnosis mode, and it can save the latest 8 pieces of information.

2.5 LCD brightness adjustment

The brightness of GSK928GE CNC system LCD can be adjusted by keys to reach the best visual effect. The method is as below:

(1) Switch CNC system to Jog mode.

(2) Press ⇧ ⇩, the brightness of LCD screen becomes brighter or darker, and the result is locked automatically. After the system power on again or reset, the brightness of LCD screen is kept the same state before power off.

(3) If the temperature of environment changes obviously, the specialty affects the brightness of LCD, which is not the fault of CNC system. And the same brightness adjustment may cause different effect; therefore, it requires readjustment to reach the best effect.

CHAPTER 3 EDIT MODE

3.1 Edit mode

The Edit mode is to manually input or rewrite the part program through system operation panel. In the Edit mode, the part program can be created, chosen or deleted through keypad; also, the selected part program content can be inserted, edited or deleted. Moreover, via the RS232 communication interface can connect with the serial interface of universal PC, then, transmit the part program of system to the external computer, vise versa.

When the user edits the program, the system checks the right of user. The user possesses the right to edit the program. The user can input correspondent password in the Para mode to change the right of the user. Otherwise, the screen prompts *User has no right!*

- Press Edit mode key

- Edit mode interface

a. All the present registered part program names;

b. Usable memory bytes;

c. They bytes for the present program.

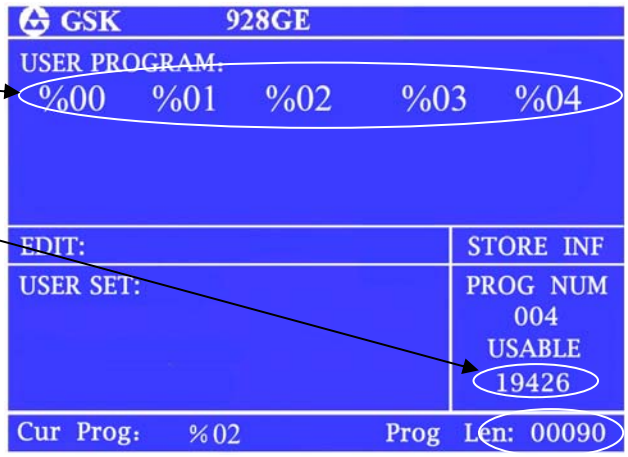

The meaning and usage of EDIT key in Edit mode:

Cursor moving upward key:

Press the key each time, the cursor moves to the first character behind last block number. Press the key without releasing, the key continuously moves up till the first program line; otherwise, the key is released.

Cursor moving downward key

Press the key each time, the cursor moves to the first character of next program row. Press the key without releasing, the key continuously moves up till the last program line; otherwise, the key is released.

Cursor moving to left key

Press the key each time, the cursor is moved by one character to left side. Press the key without releasing, the cursor continuously moves towards the left side until the first character of the same program line, otherwise, the key is released.

Cursor moving to right key

Press the key each time, the cursor is moved by one byte to right side. Press the key without releasing, the cursor continuously moves toward the right side until the first character of the same program line, or the key is released.

The cursor moves to the end of the program line.

The cursor moves toward to the first letter after program number.

REMARK
Cursor—the symbol that shows the character which can be edited at present.

Insert/rewrite key

The key is for changing the edit input mode. Press key for each time, the input method is switched between insert and rewrite, and the cursor prompt changes correspondingly. The cursor of inserting is a flickering short line and the cursor of rewriting is a flickering square shape.

Input key

Press input key each time, and it inputs the program number in two digits, the new program can be created, selected, or the exist program and all programs can be deleted.

Page up

It prompts the content of last page when searching the list of program number.

Page down

It prompts the program content of next page when searching the list of program number.

Double function definition key:

Each key has two definitions, press the key for the first time, then it is the first definition value, that is **G M X Z S T F Y L P N = * — . .** Press the same key for the second time, system changes into the second definition value, that is **I R O W J K E A C D Q # / + ␣** . If the same key is pressed continuously, the input value is changed from the first definition value to the second one or the second to the first. Among them, the "*/*" is skip block key, " ␣ "is space key. But under special working mode, if the key has one definition, then the key is switch to single function key automatically.

3.2 Part program directory search

Through part program directory searches, the users can search all stored part program number, and the remaining bytes of the part program storage and all part program name list in the Edit mode.

(1)Press EDIT in the editing mode or press ESC or INPUT during program edit.

(2)Each screen can prompt 20 program names. When the part programs of storage exceed 20, it can prompt by pagination. Then, press , and turn to the next page, it prompts the list of program numbers in the next page.

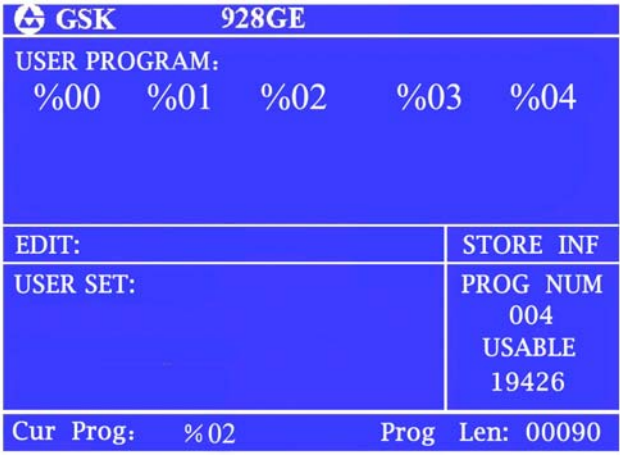

3.3 Part program management

3.3.1 Creating a new part program

(1) Press INPUT under the status of part program directory search;

(2) Input program numbers of two digits from keypad, which does not exist in the directory list, as new program number;

(3) Press ENTER ;

(4) After creating the new part program, the system enters program edit state automatically.

For example:

Create No.%19, which is new program number.

a. Press EDIT and enter Edit mode;

b. Press INPUT , the screen is displayed

Input prog number: % ;

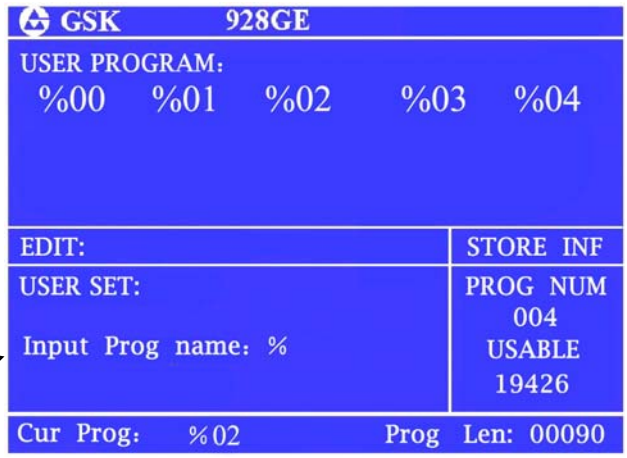

c. Press digit key 1 9

d. Press ENTER, No. %19 program number is created. Block number is generated automatically

Current program number is displayed: **%19**

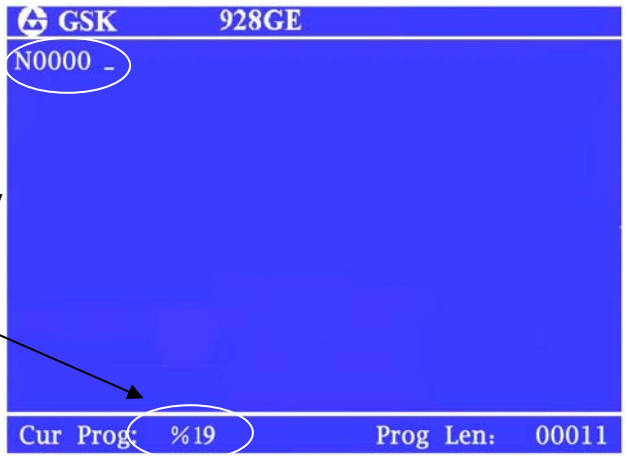

3.3.2 Selecting a part program

(1) Press INPUT under the status of part program directory search;

(2) From keypad, input the selected program number;

(3) Press ENTER;

(4) After selecting the part program, and prompt the content, then, it enters Edit mode.

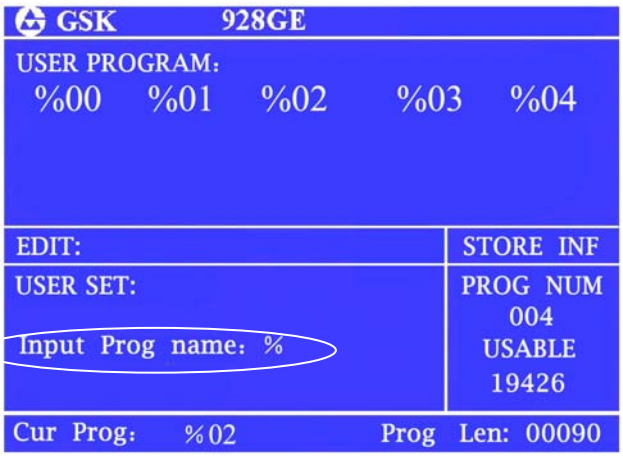

For example: select No. %02 program

a. Press EDIT and enter the Edit mode;

b. Press INPUT and screen prompts ***Input prog number:*** *%* ;

c. Input 0 2;

d. Press ENTER, program number % 02 is selected.

REMARK

1. CNC system is powered on for the first time, it enters the Edit mode or system part program storage area without any content, then, the system creates and selects %00 automatically. After system initialization, it also chooses %00 as present program.

2. After system selects one program, the program can only be changed through part program selection. Once the program is selected, it always keeps same. Even power is off, the program number can not be changed.

3.3.3 Copying a part program

Copy the present content of file to other one, and select the new files as present one.

(1) Press INPUT the screen is displayed ***Input prog number: %***

(2) Input the file name which does not exist in the file list, press INPUT , and all the content of current file is copied into the file with the new name and the new file become current one.

For example, copy the current %02 into the file of %05 program.

Press INPUT , and input 0 5 , and press INPUT the copy is completed.

REMARK

If the input file name exists, the system prompts Name repeat! Press any key exit, and input the file name again, which does not exist in the file list, and press INPUT .

3.3.4 Renaming a part program

Rename the current file name.

(1) Press INPUT , the screen prompts *Input prog number: %*.

(2) Input the file name which doesn't exist in the file list, press REW , and rename the current file name.

For example: Rename the current % 02 file as %05.

Press INPUT , input 0 5 , press REW , renaming is completed.

3.3.5 Deleting a part program

(1) Press INPUT under the state of the part program directory searches;

(2) From keypad input the program name which is required to delete;

(3) Press DELETE , the screen prompts *Sure?*

(4) Press ENTER to delete the part program which has the program number and press ESC to cancel the deleting operation.

For example: delete No. %05 program.

Press INPUT input 0 5 , and press DELETE and ENTER to delete %05 program from part program storage.

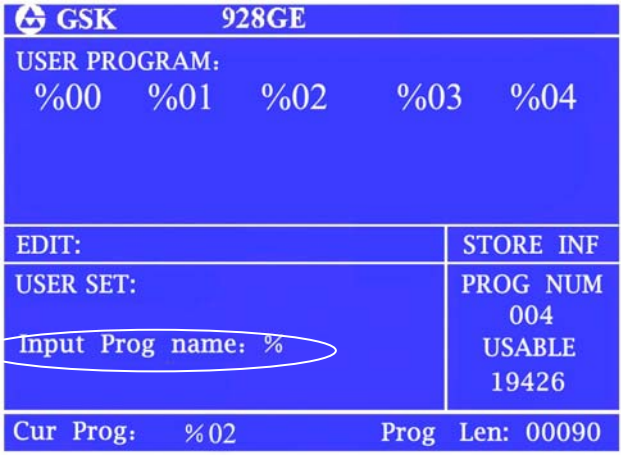

The methods of copy, renaming and deleting are displayed on the screen：

① Press EDIT and enter Edit mode.

② Press INPUT and the screen prompts ***Input prog number: %.***

③ Press 0 5;

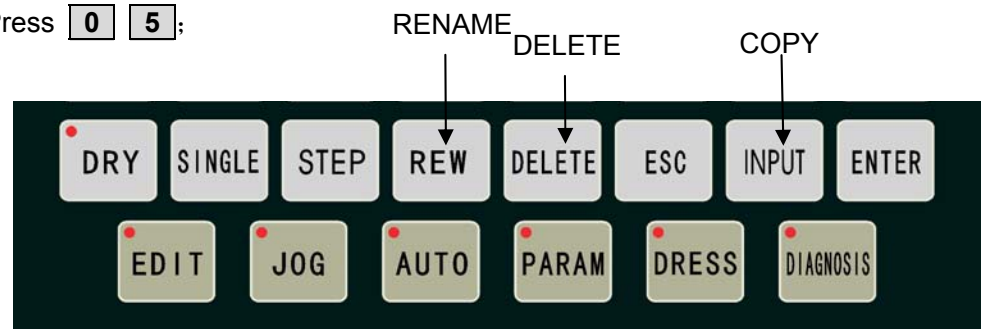

（1）After copy, the screen is displayed:

No. %05 program is same as No. %02

(5) After renaming, the screen prompts %05 program during the Edit mode.

No. %05 program replaces %02

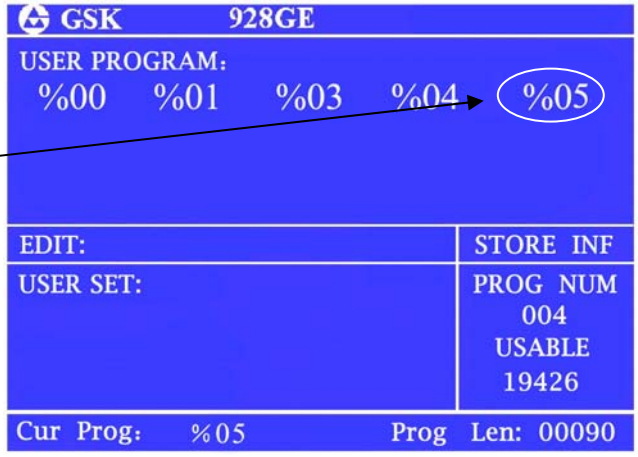

（3）During deleting, the screen is displayed：

Press ENTER , No. %05 program is deleted.

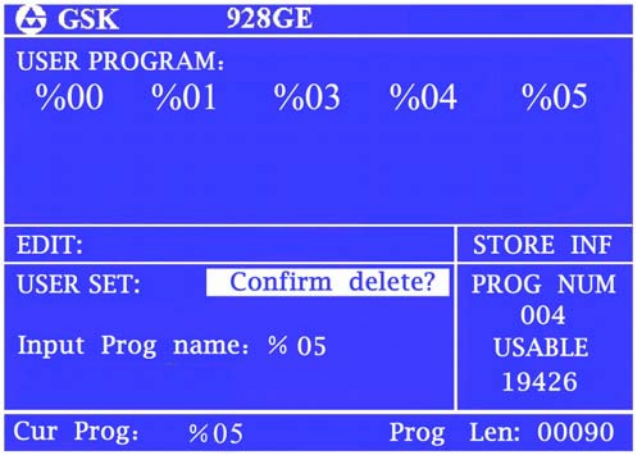

3.4 Inputting and editing a part program

CNC system machining is that the system automatically completes machining parts according to the part program sequence input by the users.

Each program consists of some blocks; each block is composed by components of sequence number, commands and data, etc. By inputting the part program content based on the processing sequence, the machine can be started to machine the qualified parts.

3.4.1 Automatic generating the serial number

Each part program includes many blocks; each block is begun with a block number of **N******. When a new program is created, the system automatically generates the first number **N0000**. Press ENTER, after inputting a block, then, the system automatically generates the next block number. During input, the number increment depends on the content of P061 parameter. While inserting blocks, the system automatically generates the block number based on integral part of 1/4 parameter P061 content.

When use the jump instruction, the program line which is specified by P should be the only one; otherwise, the same program line number may cause the jumping mistake.

The sequence of number generation and insertion of program line is as below: (the value of P956 is 10)

Automatic generation of number (P061)

Insert program line (1/4 of P061)

3.4.2 Inputting the program content

The editing mode of CNC system adopts the full screen. The input of program content is in the editing mode.

（1）Create a new program as creating a new part program;

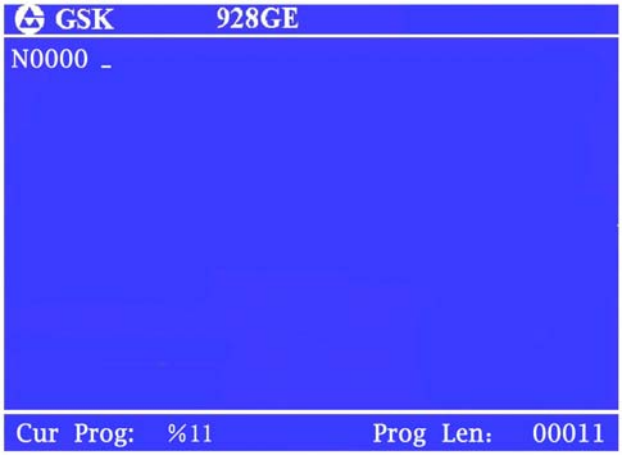

（2）The monitor prompts the number **N0000**; Insert one line of program content through keypad.

（3）After input one line of program, press ENTER, complete inputting of the line. The system generates the next block number, and then continues to input the program content.

（4）Repeat operation of the（3）step until the last line of program. Press ESC and complete the input of program content. If any mistake in editing, the system alarms. Then Press ENTER again; it exits the edit interface.

Prompt the program ends without end command of **M02**.

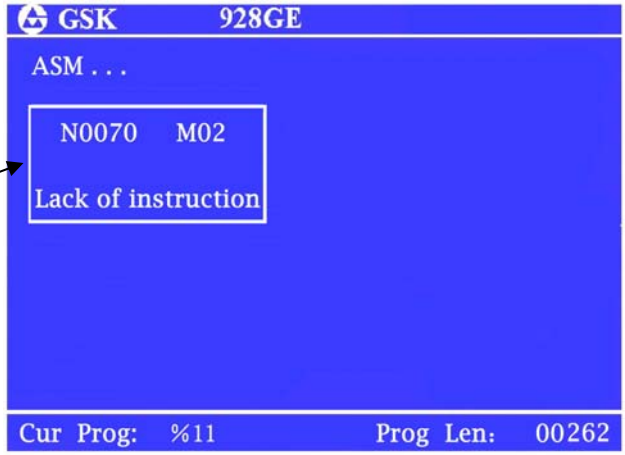

REMARK

Each block only prompts 38 characters. It just prompts the leading 38 characters of the block if exceeding 38 characters. Press ⇨, it prompts a character of the block to the right side. But each line can not include more than 255 charactes, otherwise, the system does not accept the content any more. The monitor can prompt 12 lines of program, it automatically moves upward if more than 12 lines.

3.4.3 Inserting a program line

Insert one or multiple program lines between two program lines.

(1) Press ⇧ ⇩ and move cursor to the first block between two blocks.

(2) Press ⇨ until the cursor moves behind the last character, or press and move the cursor STEP directly to the last character.

(3) Press ENTER, the system automatically generates number of a new block between two blocks and leaves one blank line. The number increment is 1/4 integral value of P061 parameter, if it is not enough, then the next line number can be rewritten.

(4) Input the block content to be inserted;

(5) After inputting all the content; press ENTER if multiple program lines should be input. If there is one program line, the operation is not required.

(6) Inserting the block is over.

REMARK

1. Insert the block behind the last one and press ENTER and it automatically generates the next block number.

2. Before the first program line, it is not allowed to insert block. If it requires inserting block before the first line, rewrite the content of the first line into that of the line to be inserted, and insert the original first line into this program line.

For example: Insert the new block M3 between blocks **N0020** and **N0030** .

(1) Press ⇧ ⇩ and move the cursor to **N0020** .

Press STEP and move the cursor behind X50.

(2) Press ENTER , the system automatically generates new program line number and leaves one blank line to prompt **N0022** . The cursor points to the first character, which can be input, of the new program line.

Input **M** **3** 。

(3) Press ESC and finish inserting operation.

3.4.4 Deleting a character or a block

Delete the character of one program line or the whole content of program line including the serial number.

(1) Press ⇧ ⇩ and move the cursor to the block which requires deleting;

(2) Press ⇦ and move the cursor to the character which should be deleted; if delete the block of the whole line, move the cursor to the beginning of block to be deleted.

(3) Press DELETE and delete the character which is pointed by cursor. If the cursor is at the line beginning of block, then the block of the whole line is deleted.

3.4.5 Inputting a field in a block

(1) Specify whether the current input is inserting; if it is not, press REW and switch the input to inserting;

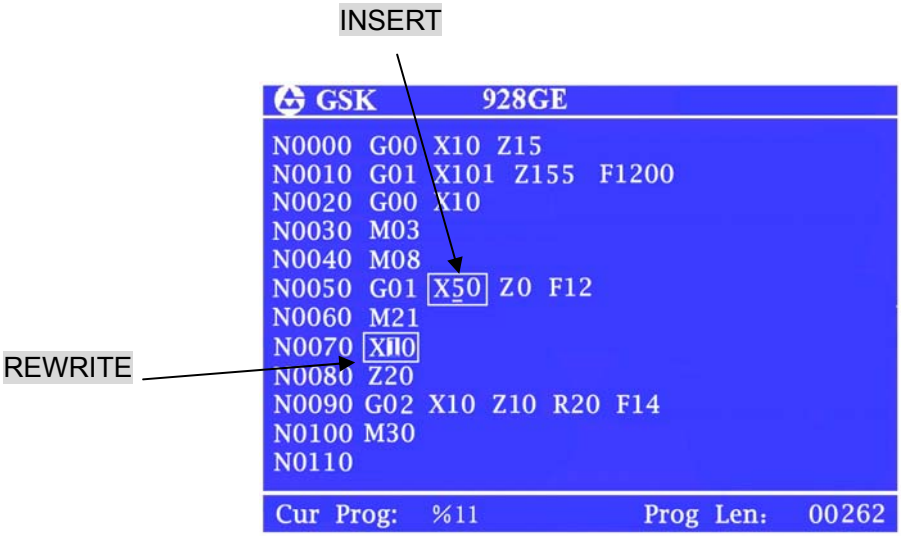

(2) Press ⇦ or ⇨ and move the cursor to the position that is after the character and should insert the content;

(3) Input the content which should be inserted, and insert the content before the character which is pointed to by cursor.

For example: In **N0020 G0 X50**,

insert 1 between X and 5.

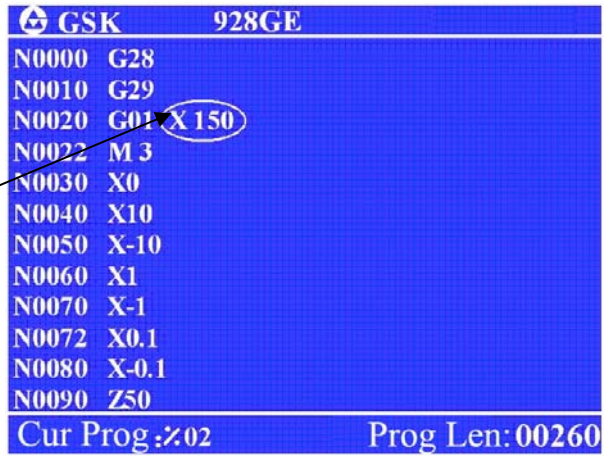

REMARK

Because CNC system requires each filed of program line must be partitioned by space, which is one letter followed with digits. During input, the editing program can automaticly judge and generate the space. However, during the inserting Operation, sometimes, the system can not judge automatically sometimes. Therefore, the operator should input by himself the space to gurantee the intergrity of the program.

3.4.6 Rewriting the content of a block

Change the content of a block into a new one. There are two methods as options based on the input: insert or rewrite.

In insert mode, use inserting and deleting to complete it.

(1) Press ⇦ ⇨ , move the cursor to the character which should be rewritten;

(2) Insert new contents;

(3) Delete the surplus content through the same operation which is used for deleting the block content.

In rewrite mode, directly rewrite the content which is pointed to by the cursor.

(1) Press REW and switch the input mode to rewrite mode, and the character which is pointed to by cursor is bright square shape.

(2) Press ⇦ and move the cursor to the character which should be rewritten.

(3) Input new content, the cursor points to the next character.

For example,

Change **N0050 X10** to **X120**

In insert mode:

(1) Move the cursor to X10, below 0.

(2) Input 2

(3) Move the cursor to X120, which is below 1 ;

(4) Press DELETE , then, X120 is changed to X20.

In rewriting method:

(1) Press REW and change the input mode to rewrite mode, and the character pointed to by cursor is displayed in bright square shape.

(2) Put the cursor above 1 of X10.

The character selected prompt as bright square shape.

(3) Insert 2, it is changed to X20.

3.4.7 Skipping a block

Insert a sign of / before number N of a block.

During executing a program, the system skips this block and executes the next one.

(1) Switch the input mode into the insert one.

(2) Move the cursor to the block which should be skipped, and press ⇦ to the block, which is below N;

(3) Continuously press * / , and insert the character / before N;

(4) When complete programming, if it encounters the mistakes of program during exit, press ENTER for the next operation!

3.5 External inputting a part program

Input the part program which is stored in the external computer into CNC system.

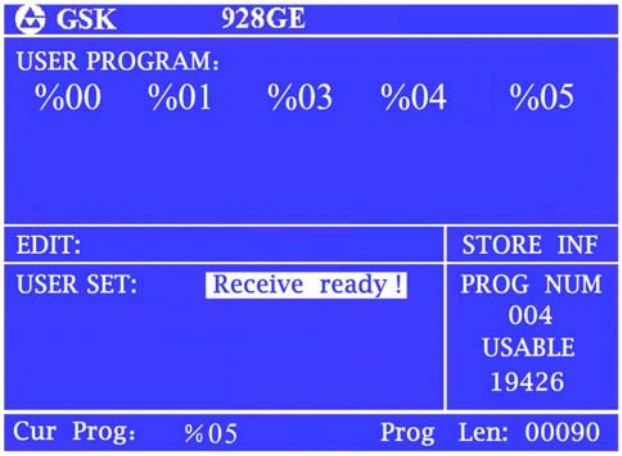

(1) After power off, connect the communication cable between CNC system and computer;

(2) CNC system is switched on and select the Edit mode;

(3) Press [M R] and it prompts *Receive ready!*

(4) Specify the system is ready, press [ENTER], it prompts *Receiving……*, and the program of the external computer is input into CNC system;

(5) Set the communication software of computer to the output mode;

(6).After receiving, it prompts *Receiving is over!* Press [ESC] and come back Edit mode. In the list of part program, it prompts the input program name by ascending sequence.

(7) During receiving, press [ESC] to terminate the receiving process.

REMARK

During part program input, if CNC system has the same program number, the system reminds Same program name, then change or delete the program name, the communication works again.

3.6 External outputting a part program

Send the part program stored in CNC system to the external computer.

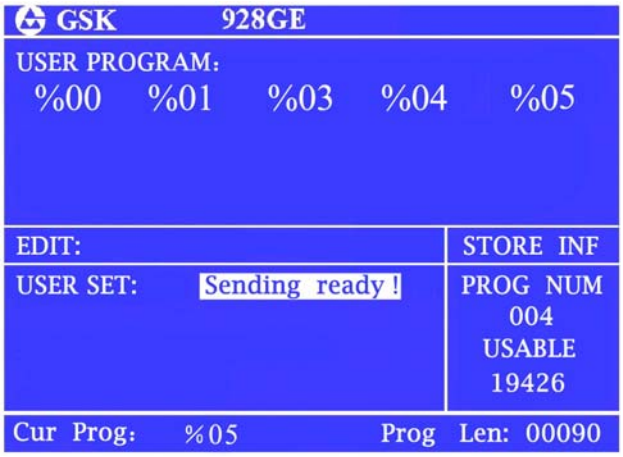

(1) During power off，connect CNC system with computer through communication cable.

(2) CNC system is switched on and selected Edit mode;

(3) Select the part program which should be sent by the operation of selecting the part program;

(No option if send the current programs)

(4) Press [Z W], it prompts *Sending ready!*

(5) Set computer as the status of receiving.

(6) Specify the external computer ready, press ENTER and it prompts *sending……*, the selected program is sent to the external computer.

(7) After sending, it prompts *Sending is over!* Press ESC and return Edit mode.

(8) During sending, press ESC and terminate the sending.

3.7 Deleting all part programs

Delete all programs in the storage of CNC system.

(1) Press INPUT in the status of part program directory researches.

(2) Input — and 0 from the keypad;

(3) Press DELETE, the system prompts *Confirm delete*?

(4) Press DELETE and delete all part programs,

If ESC is pressed, the deleting operation is not executed and come back to Edit mode.

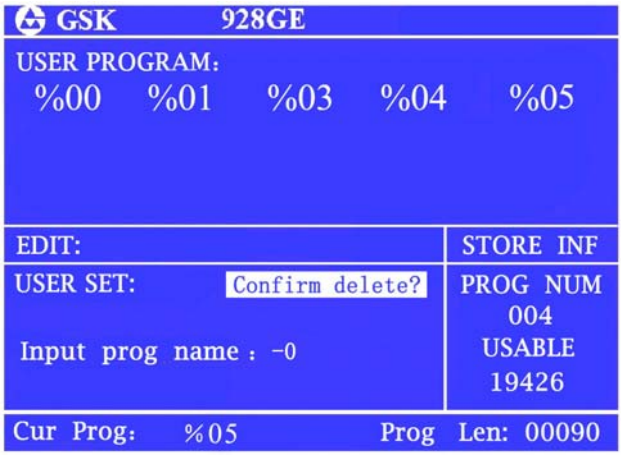

CHAPTER 4 JOG MODE

4.1 Overview of Jog mode

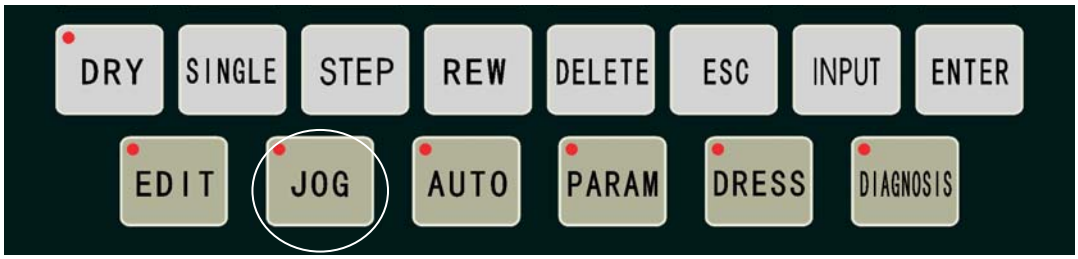

Press JOG , the machine comes into Jog mode.

During Jog mode, press STEP , the two methods of Jog and Step can be switched.

Press MPG key X MPG or Z MPG , it comes into MPG mode; meanwhile, the coordinate axes which are controlled by MPG are selected. Through keypad, it can operate the movement of worktable and movable socket of grinding wheel, start and stop spindle of grinding wheel and cooling fluid, adjustment of feed override and the function of X axis machine returning to home position.

The system initialization mode is Jog mode, as the following figure shows:：

4.1.1 Manual operation

(1) Select Jog mode;

(2) Press STEP , select Jog mode. The maximum movement distance of each continuous pressing same key is 1000.000mm.

(3) Press one direction key, the work table or the movable socket of grinding wheel moves in the direction of selected coordinate axes. Press the key without releasing, the worktable or the socket is moved continuously. Release the key, the socket or the worktable decelerates and stops.

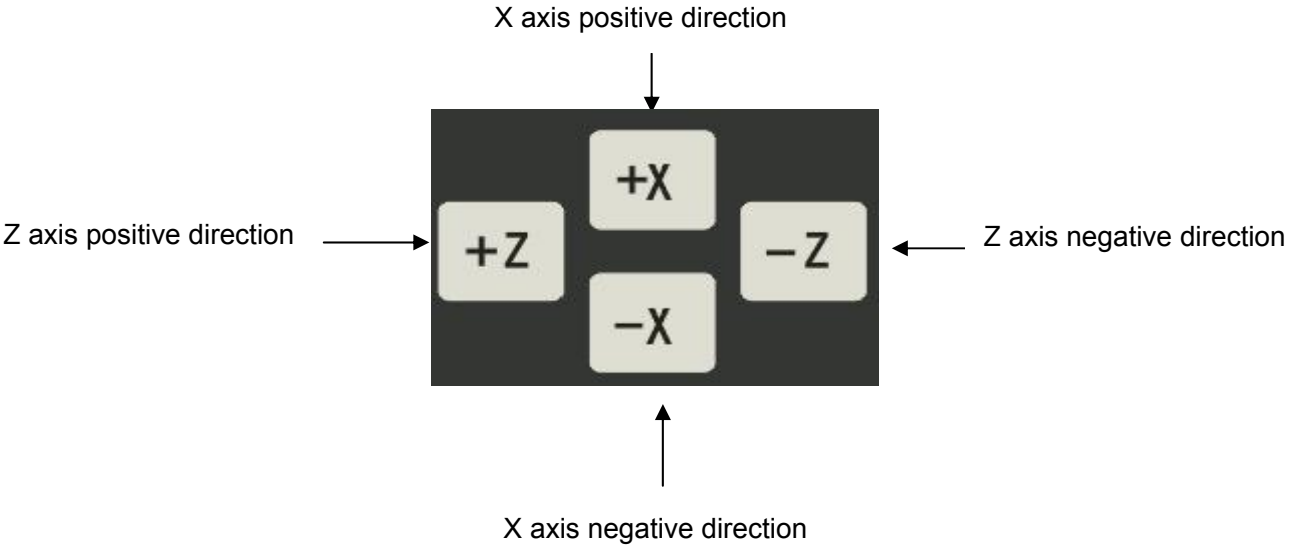

4.1.2 Manual step operation

(1) Press STEP and select Step mode.

(2) Press STEP WIDTH and select the step.

(3) The steps are divided into 6 levels: 0.001, 0.01, 0.1.1.0, 10.0 and 50.0, press the key for one time, the step increases by one level, and it switches in circulation.

(4) Press +Z +X −X −Z , the worktable and movable socket of grinding wheel is moved in the selected direction of coordinate axis by the chosen distance of step. Press one direction key without releasing; it is moved one level of step.

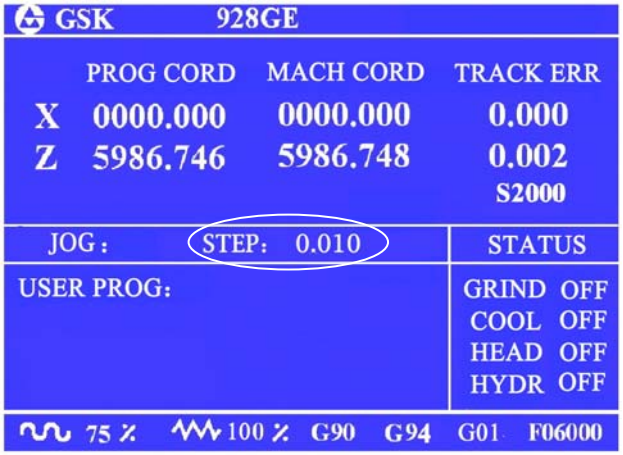

REMARK

Press PAUSE and stop moving in Step mode.Press the key, the worktable and the socket of grinding wheel decelerates and stops, the remaining step is not kept, and press feeding key to execute the next feeding process of single step.

4.1.3 MPG operation

In MPG mode, the movement of worktable and movable socket of grinding wheel can be controlled by turning the manual pulse generator (MPG).

(1) Select MPG axis  or  , it enters MPG mode.

(2) Press  and select the moving distance.

● There are three options of circulation switches: 0.001、0.01、0.1mm

● When the working mode is switched from Step mode into MPG, the move distance value of each scale is automatically selected as 0.010mm.

(3) Running MPG.

● CW running, the coordinate axis moves in the positive direction;

● CCW running, the coordinate axis moves in the negative direction.

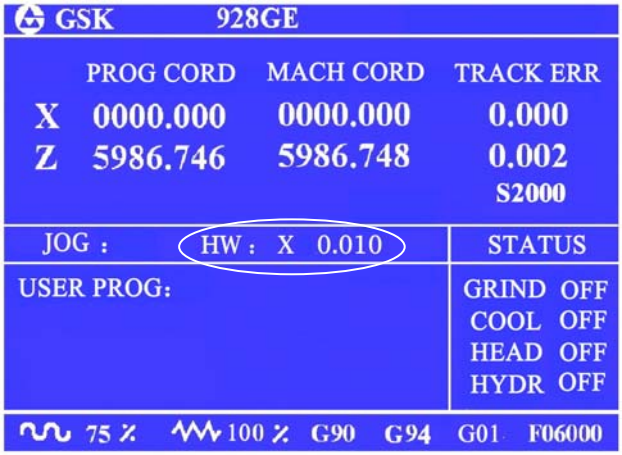

REMARK

During MPG mode, other function key on axis move are not working, such as jog, return to home positon, relative and absolute movement, but other M accessorial functions are still valid.

4.2 Selecting the manual feedrate

In the manual feeding mode, there are two selections that include the override of manual feedrate and manual rapid override.

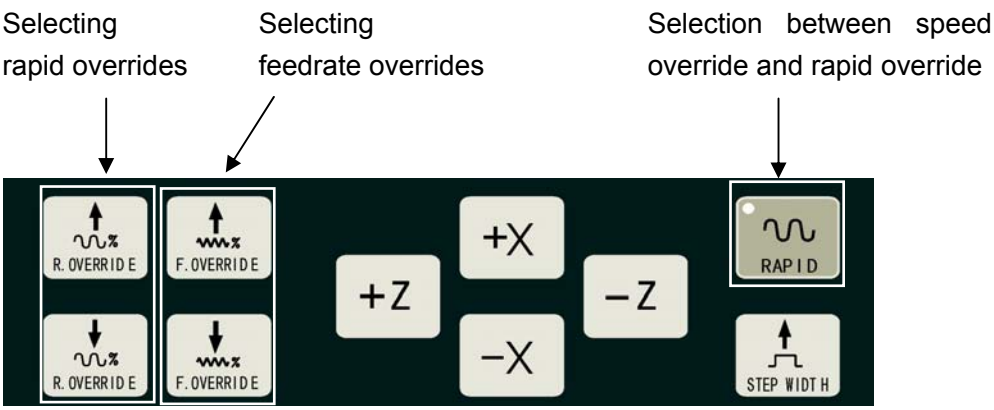

4.2.1 Selecting manual feedrate overrides

Select the feedrate override in Jog mode.

F. OVERRIDE Feed rate override increases 1%.

F. OVERRIDE Feed rate override reduces 1%.

In Manual feeding mode, press RAPID and rapid indicator is OFF, the screen prompts as below:

For example:

The feedrate **F** is 6000, and selective speed override 80%, then the actual feedrate is 6000*80%=4800.

Feedrate override

4.2.2 Selecting manual rapid feedrate overrides

The rapid mode is selective in manual feeding mode. During rapid feeding, the speed is selected by override.

In manual rapid feeding, the actual feedrate depends on rapid traverse speed and override:

X axis actual rapid speed = P005 X rapid override

Z axis actual rapid speed = P006 X rapid override

In Manual Feeding mode, press RAPID and select the manual rapid feeding mode, then the indicator is ON, the feedrate and rapid override are displayed as bright square shape, and the screen is shown as below:

4.2.3 Manual setting feedrate **F**

In Jog mode, it can set the feedrate in Jog and Auto modes by inputting the feedrate F. The method is as below:

a) Select Jog mode;

b) Press [F E], then, **F** shows brightly, in the rapid parameter range of X and Z axes, any digit between 0000.000 and 8000.000 can be input.

c) Press [ENTER], the feedrate value is the input digit value on the screen; Press [ESC], then the feedrate doesn't change.

For example, manually input F3000

(1) Select Jog mode and input **F3000**, then, the feedrate F in the information prompt bar is "*6000*".

(2) Press [ENTER], the feedrate F is changed into *3000*

REMARK

When the coordinate axes are stable, the speed value F shown in the information prompt bar is setting value. When coordinate axes are moving, it is feedrate value of moving axes and fluctuates in the range. When many axes move rapidly, the system prompts the speed value as their minimum value.

4.3 Setting a workpiece coordinate system

GSK928GE CNC system uses the floating workpiece coordinate system, which is equivalent to the program coordinate system. Workpiece coordinate system is the benchmark of tool setting and its

dimensions. After finishing the installation of system, firstly, the workpiece coordinates should be set up. If the machining steps out for some special reasons, the actual position and workpiece coordinates can not comply with each other, and then the workpiece coordinate system should be set again. The operation of setting workpiece coordinate system:

(1) According to the requirement of machining, move the grinding wheel to the setting point of workpiece coordinate system.

(2) Press INPUT , the screen prompts *Set* , then press X, the screen prompts *set X* , input the coordinate system value at the workpiece coordinate system of X axis direction. Press ENTER , the system prompts *Specify input?* Then press ENTER and specify whether the system has already automatically set the workpiece coordinate system of the X axis direction or not and refresh to display. Press ESC , the workpiece coordinate system setting of X axis is canceled. If the input data is wrong, press ⇦ and delete one by one, rewrite and input again.

(3) Press INPUT , the screen prompts *set* , then press *Z* key, it prompts *set Z* , input the workpiece coordinate value at Z axis direction. Press ENTER , the screen prompts *Specify input?*

Press ENTER and specify whether the system has already set the workpiece coordinate system of the X axis direction and refresh to display. If press ESC , the workpiece coordinate system setting of Z axis is canceled. If the input data is wrong, then press ⇦ and delete them one by one, rewrite and input again.

(4) When the program coordinate system needs fine setting, firstly press INPUT , the screen prompts *set*, select the coordinate axis X or Z which is required fine setting, input the value of increasing or reducing, and then press REW and specify and refresh the screen.

REMARK

Through the above operation, the workpiece coordinates of system can be created and completed. After initialization of system, the workpiece coordinate system must be set.

4.4 Manual input movement control

In Jog mode, the axis movement is directly controlled by inputting the movement distance. The input distance value is the target distance of program system coordinates. The operation is as below:

(1) Select the position axis *X* which should move directly and it shows as the following left figure:

(2) Manually input the target coordinates which is required to *move X*,

Press ENTER , then the screen prompts *Specify operation?*

If it is specified, press , the system automatically moves to the setting coordinate system value, as the following right figure shows:

4.5 Manual measuring instrument control

In Jog mode, it may select measurer forwarding or retraction through manual keys based on the requirement. The system panel not only provides an instrument control button as radial control which is default by the system, but also it can change the parameter 4 Bit 6 for control of end surface instrument, also M commands can also control the forwarding or retraction of instrument.

Press , the instrument can move to the specified measuring position; Press the key one more time, the instrument returns to the original position.

4.6 Manual grinding wheel spindle control

In Jog mode, the start and stop of the spindle axis can be controlled through keypad.

Press , the grinding wheel starts running, the screen prompts the status of grinding wheel: ON, meanwhile, the LED indicator is also ON.

Press again, the grinding wheel stops running, the screen prompts the status of grinding wheel: OFF, meanwhile, the LED indicator is also OFF.

4.7 Manual machine-head control

In Jog mode, the start and stop of machine-head can be controlled through keypad.

Press HEADSTOCK , the machine-head starts, the screen prompts the status of machine-head: ON, at the same time, the LED indicator is ON.

Press HEADSTOCK again, the machine-head stops running; the screen prompts the status of machine-head: OFF, at the same time, LED indicator is OFF.

4.8 Manual hydraulic pressure control

In Jog mode, the start and stop of hydraulic pressure can be controlled through keypad.

Press HYDRAULIC PRESSURE , the hydraulic pressure starts; the screen prompts the status of machine-head: ON.

And press HYDRAULIC PRESSURE again, the hydraulic pressure stops running, the screen prompts the status of hydraulic pressure: OFF.

4.9 Manual cooling control

In Jog mode, the start and stop of cooling fluid can be controlled through keypad.

Press COOLING , cooling fluid starts, the screen prompts cooling status: ON; meanwhile the LED indicator is ON.

Press COOLING , the cooling fluid is off, the screen prompts cooling status: OFF; meanwhile, the LED indicator is OFF.

4.10 Manual spindle control

In Jog mode, the movement status of the second spindle can be controlled through keypad. Based on the different control mode, the function of spindle control button may be different. About the selection of control mode, refer to parameter Bit6 and Bit7. Under the servo spindle control circumstances, according to the usage requirement, generally, press RUNNING to manually control the switch of spindle through clockwise signal or connecting or breaking the enable signal.

Normally, press RUNNING , the spindle runs. Press STOP and stop.

4.11 Manual inputting and executing M function

In Jog mode, M code command can be input and executed for the corresponding M function. Normally, only input system is allowed to control output M code. The method is as below:

(1) Select Jog mode;

(2) Press M , M is shown brightly and then input one or two digits by numerical keys.

(3）Press ENTER , execute the corresponding M function; Press ESC , M function is canceled.

For example, manually input M03 function

(1) Select Jog mode, input **M03** .

Then, the grinding wheel in the status bar is indicated OFF.

(2) Press ENTER , execute **M03** and start motor of grinding wheel, the status of grinding wheel in the status bar is ON.

REMARK

The M code can be input manually: M03、M05、M08、M09、M10、M11、M12、M13、M14、M15、M16、M17、M18、M19、M20、M21、M22、M23、M24、M25、M26、M27、M28、M29、M33、M35、M46、M47、M48、M49、M50、M51、M70、M75、M78、M79.

4.12 Manual inputting and switching into G state

G status which is input and switched includes the switches between programming status of relative/absolute (G90/G91) and feeding status of per minute/per revolution (G94/G95).

About the details, after pressing G , input the changed status (91—90 or 95—94), after specifying, the corresponding status is automatic changed in the info. bar.

For example: manually input G91 to change program method:

(1) In the info prompt bar, the current programming coordinate method prompts "G90" (absolute coordinate program).

(2) In Jog mode, press G , and then input "91", press ENTER and specify the mode automatically changes into "G91" (relative coordinate program) in info. bar.

4.13 System angular axis function in Jog mode

The function of the angular axis is for grinding and cutting of ladder shaft. The basic principles are:

1. Z and X axes are not vertical, the contained angel is **α** degrees. About setting degrees, refer to parameter P051 and P052.

2. Use shaped grinding wheel to grind the external circle and end surface.

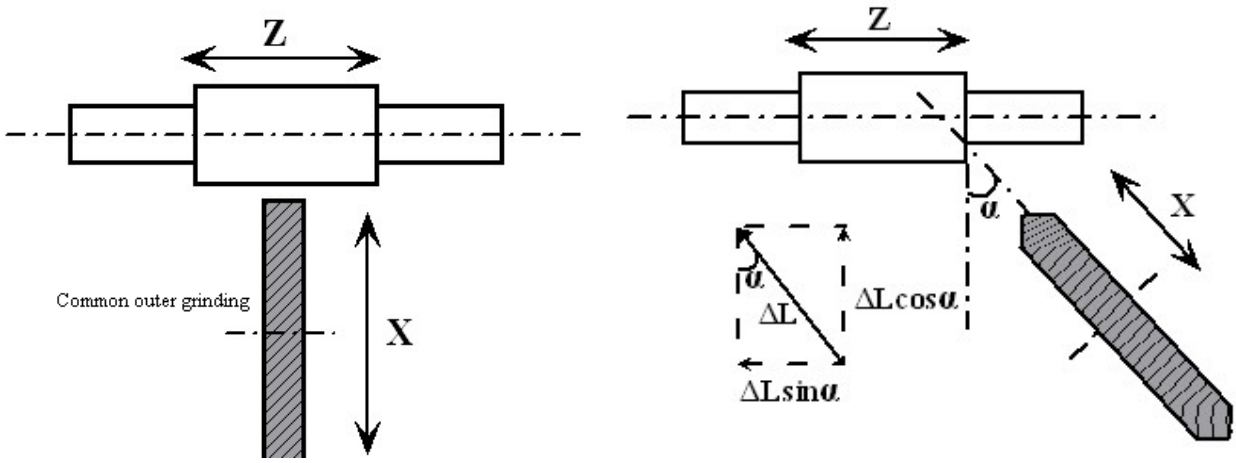

Grinding angular axis

There are two methods of angular axis feeding: the link between X and Z axes (M50), the independent movement of X and Z axes (M51). The machine coordinate system of X axis machine is the actual movement distance which the grinding wheel moves in the direction of angular axis, and the workpiece coordinate of X axis is movement distance which the grinding wheel moves in the X axis radial direction. During link, X axis moves and Z follows. But the workpiece coordinate of Z axis remains unchanged, that is to say, the relative position of workpiece and grinding wheel in Z axis direction remains unchanged, only the machine coordinate changes. When Z axis moves, X axis is static, the workpiece coordinate system of Z axis and the coordinate system of machine changes normally. Z and X axes move independently if they are not in the link.

(1) In Jog mode, input **M50**.

(2) Press ENTER , the angular axis mode, which is in the information bar, prompts M50, and it is two-axis mode.

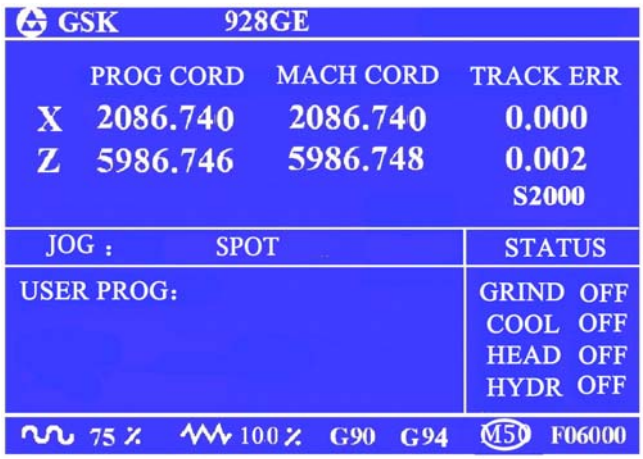

REMARK

1. When system uses angular axis function (input corresponding angle), the interpolation status in system prompt bar is changed to M50/M51.
2. The system defaults the angular axis mode as M50; it automatically sets M50 after switching the interface.
3. The machine resets and returns to reference position, the link (M50) is automatically canceled and returns to M51 status.

CHAPTER 5 AUTO MODE

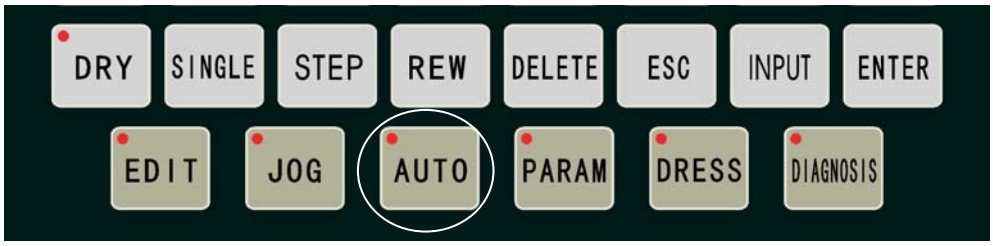

Press AUTO and enter Auto mode. In Auto mode, the system automatically executes the current selected program and machines the qualified workpiece.

Auto mode is classified into machining and dry run which is machine lock mode.

The initializing interface of Auto mode is as below:

In machining mode, the system can run in single block or continuous running.

5.1 Function key in Auto mode

SINGLE

Switch between single block and continuous running mode

Press this key each time, the running mode between single block and continuous operation is switched for one time; meanwhile, the screen prompts the selected mode. When the mode is single block and screen prompts *single block*. When working mode is continuous running and screen prompts *continuous running*. During the continuous running, the single segment mode stops after pressing this key, that is to say, this block completes and the execution of single block pauses and it starts after pressing running key.

DRY

Switch between machine lock and machining

Press the key each time, Auto mode is switched between machine lock and machining for one time. In the machine lock mode, press DRY , LED indicator is on; in the machining mode, LED indicator is off. In the machine lock mode, the program is running, but the coordinate axis remains unchanged and the other machine miscellaneous functions are off.

INPUT

Selecting the block number

Press this key and select the block which is required to run, press CYCLE START, the system operates from the selected block.

Cycle start key

During the single block running, press the key for one time and one block is executed. During continuous running, press the key and the program is executed from the beginning to the end.

Feed hold key

During program running, press the key, then the coordinate system decelerates and stops; the screen brightly prompts *Pause!* Press cycle start key, the remaining part of program is continuously executed. Press ESC, the remaining part is not executed.

REMARK

After finishing dry run, the coordinate system automatically recovers the program coordinate system value before dry run. The coordinate of machine always remains unchanged.

5.2 Automatic running a machining program

In Edit mode, firstly select the program for automatic running, and switch to Auto mode, then the system executes the selected part program to automatically machine the workpiece.

The initialized mode is continuous mode in Auto mode.

5.2.1 Starting from the first line of a machining program

After entering Auto mode, the system automatically prompts the machining program information of three lines. And prompt symbol **"*"** before the running block number.

Press 

, the program automatic machining can start.

After the machining begins, the program in the first line is the block just ended, the second one is the executing block, and the third one is the block to run.

5.2.2 Starting from the specified line of a machining program

Under some circumstances, it should start from any line of a machining program, and the current program can start from any line and the grinding wheel can stop at any position. The steps are as below:

（1）Determine the specified program line to start running.

● Press INPUT , the system can prompt the first line of current running program.

● Press ⇧ ⇩ , the system prompts the content of last block or next block.

(2) Press ENTER and prompt the block which is going to run, the screen prompt *Sure to run?* Then wait for the next operation.

(3) When the screen is displayed *Sure to run?* , press CYCLE START , the system automatically calculates the coordinate position to be reached before executing the block, and automatically move and reach the position in previous mode. If press ESC , the system exits the selection and prompts the original block.

REMARK

The user can only select the block of main program; also check the block of subprogram, which is not allowed to run. Press CYCLE START during checking the subprogram, then the dialogue *Please return to main program* pops up, and then the user can not execute the subprogram.

5.2.3 A machining program running in single block or continuous running

After editing the program, the single block mode can be selected to run for safety at the first time. Press CYCLE START, the system automatically executes one block. Observe whether the running of machine is compliant with the designed movement of program, and then decide the next operation.

If the machine is running normally, press CYCLE START and execute the program one by one until the program finishes. If any block is not compliant with the movement of designed program, then the

running should stop, and return to the program reference position, find out the reason, and rewrite the program until it is correct. Finally, select the continuous running mode and automatically machine the parts.

(1) Press SINGLE , the indicator is on, and the machine enters single block mode. In the middle of the screen, it prompts *single* .

Press SINGLE again, the indicator is off, and it returns to Auto mode.

(2) In the single block mode, press cycle start key CYCLE START once and it executes one block; Press CYCLE START again and it executes the next block.

(3) During executing the single block, press SINGLE , it is not working. However, the switch between "SINGLE" and "CYCLE START" are valid after the current command operation.

5.3 Dry run (machine lock)

After editing a machining program, the coordinate data and executing sequence of blocks can be observed in the screen during dry run mode, and it may judge whether the machining path is correct or not to avoid the mistake of program data input which may result in some consequence. If the machine lock program is normal, it can be switched into the machining mode.

Press DRY once, the running mode is switched between the machine lock mode and machining mode for one time. When the machine lock mode is selected, the top left indicator of its key is on.

（1）Auto mode;

（2）Press DRY , the indicator is on.

- The machine enters dry run mode.
- Press DRY again, the indicator is off, and the dry run mode is off and it returns to Auto mode.

REMARK

1. During the machine lock mode, the coordinate axis locks, and other miscellaneous function output is invalid.

2. When entering Auto mode, the initialized mode is the machining mode;

3. During dry run, the system program coordinate changes, while the machine coordinate remains unchanged and the machine doesn't operate.

4. Dry run can also estimate correctness of the arc in advance.

5.4 Checking the macro variable in Auto mode

During Auto mode, press [P D] and switch between the program page and macro variable page. Check the macro variable of parameter directly.

The operation is as below:

(1) In Auto mode, the program doesn't running or dwelling mode;

(2) Press [P D], the user program area prompts the macro variable of floating point type;

(3) Press [⇧] [⇩] and turn over the macro variable of floating point type.

(4) Press [P D] again; the user program area prompts the macro variable of integral type.

(5) After prompt the macro variable of integral type, press [P D] again, the page comes back to the program dwelling position; press [CYCLE START], then the program continuously runs.

5.5 Manual operating the machine miscellaneous function

During Auto mode, spindle of grinding wheel, machine-head motor, cooling fluid, hydraulic pressure and the second spindle etc, the miscellaneous function can be operated manually without executing the program. The cooling fluid control can be operated during program running.

- Press , the spindle of grinding wheel starts running, the screen prompts the grinding wheel and LED indicator are on. If the spindle of grinding wheel is off, and the screen prompts that the grinding wheel and LED indicator are off.
- Press , the machine-head motor begins running, the screen prompts that the machine-head and LED indicator are on. When the machine-head motor is off, the screen prompts that the machine-head and LED indicator are off.
- Press , the cooling fluid switches between on and off, the cooling fluid is on, the screen prompts the cooling fluid and the LED indicator are on. When cooling fluid is off, the screen prompts that the cooling fluid and the LED indicator are off.
- Press , the hydraulic pressure switches between on and off. When hydraulic pressure is on and the screen prompts the hydraulic pressure is on. When the hydraulic pressure is off and the screen prompts the hydraulic pressure is off.

5.6 Adjusting speed overrides

In Auto mode, when the speed override is changed, the movable socket of grinding wheel also changes.

- Feedrate override: adjust the speed F setting value in the program

Actual feedrate F = system specified feedrate X feedrate override

Feedrate override totally has 151 levels from 0%~150%, all the control commands of feedrate is controlled by feedrate override during execution. When feedrate override is zero, stop running.

- Rapid override: adjust the rapid traverse movement command of G00 and so on in the program.

X axis actual rapid speed= Parameter P005 X rapid override

Z axis actual rapid speed= Parameter P005 X rapid override

The rapid override totally has 100 levels from 1%--100%, and the interval is 1%. During the program implementation, all the command and movement of rapid feeding are controlled by rapid override.

Press once, the feedrate override increases by one level until 150%.

Press once, the feedrate override reduces by one level until 0%.

Press once, the rapid speed override increases by one level until 100%.

Press once, the rapid speed override reduces by one level until 1%.

REMARK

No matter whether the program is running or not, the speed override can be changed through the above four keys.

CHAPTER 6 SETTING SYSTEM PARAMETERS

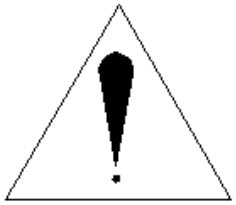

The improper parameter setting may result in the loss of the machine function or the wrong movement which may hurt the operator. Before rewriting the parameter, please read the chapter carefully.

There are many parameters in CNC system of GSK928GE, it adopts grouping method to manage the parameter for the user to look up and rewrite the parameter conveniently. According to different functions, the parameter is classified into nine groups, each parameter group has different parameters and each parameter has clear definition. Parameter setting plays an important role in the system specialty and machine function. During the installation and debugging of machine, the corresponding parameter should be set based on the detailed setting of machine.

The parameter setting directly affects the running of system and machine directly, so it can not be changed at random. Only the user who has the right to rewrite the parameter can change the parameter. The users can input their own password to change the user's right.

At the same time, 928GE also provides the system parameter and backup and restore function of PLC program for user. Therefore, if the parameter or PLC programs are mis-rewritten, the users can restore by themselves.

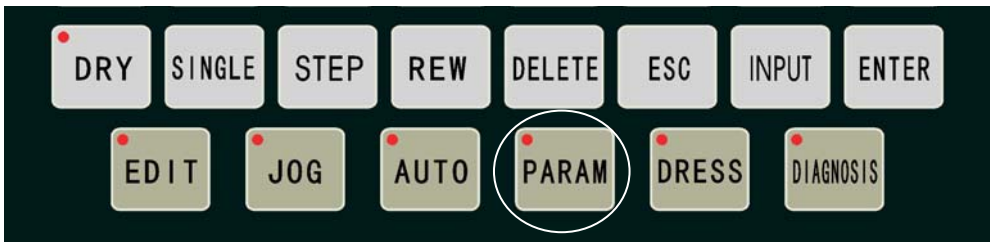

Press PARAM and enter the parameter setting mode. The screen prompts nine submenus of parameter and the range of parameter.

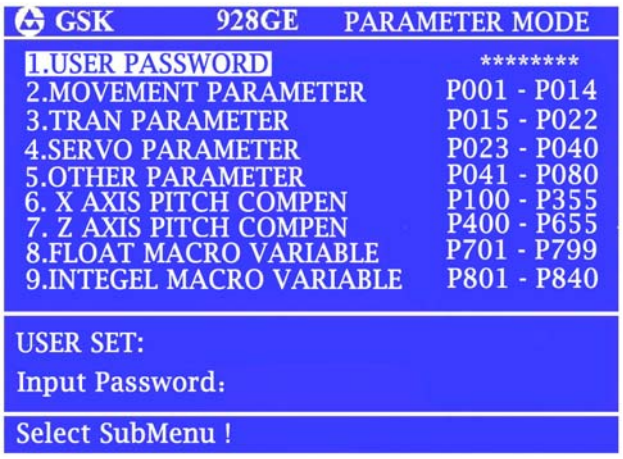

Through  or  , it can be switched between the parameter and PLC backup and operation interfaces.

Press ⇧ ⇩ and select the corresponding parameter submenu up and down, press ENTER and enter the parameter submenu pages to check the parameter setting, or directly enter through the number to check the parameters. The user can enter submenu by pressing ⇦ or ⇨ to turn the pages forward or backward, and prompt other parameter and each page includes nine parameters and press ⇩ ⇧ to select the parameter.

6.1 Introduction of parameters

After selecting the parameter number, the screen prompts the selected parameter number and name brightly, and the setting range of parameter, the meaning of each parameter is as below:

6.1.1 User passwords

To prevent the situation that the program or parameters are falsely changed, the system sets the user's password. Different user's password corresponds to different right of system operation. The system operational rights are classified into three levels: machine manufacturer, programmer and operator. Respectively, their rights are:

Machine manufactures: They can rewrite all parameter, PLC program and the machining program.

Programmer: They can rewrite the machining program and the parameter except for the pitch error compensation and the password is: 928.

Operator: They can only rewrite the macro parameter, the password is: 0.

After setting user's password, it remains unchanged without rewriting. After the user changes the parameter or rewrites the program, the password should be set as initialization value, and guarantee the program or the parameter is not mis-written. After power on or resetting each time, the initialization value is defaulted as 0.

6.1.2 Movement parameters

The parameter is mainly to control the movement of X and Z axes, including the rapid speed, maximum travel limit and time of acceleration and deceleration, etc.

6.1.2.1 Parameters P001 and P002----stroke limit values of X axis positive and negative directions

Respectively, P001 and P002 are used to set the maximum travel limit of X axis positive and negative directions for the grinding wheel socket. If X axis coordinate system is bigger or equal to the value of P001 parameter (positive travel limit value), then X axis can not move in the positive direction, only negative. If X axis coordinate system is smaller or equal to the value of P002 (negative travel limit value), then X axis can not move in the negative direction, only positive.

The initialization setting: 8000.000—8000.000mm

REMARK

Although the range of coordinate is 8000.000-(-8000.000) =16000.000, relative moving distance can not exceed 8000.000.

6.1.2.2 Parameters P003 and P004----stroke limit values of Z axis positive and negative directions

P003 and P004 separately sets the maximum travel limit of grinding wheel in Z axis positive and negative direction, If Z axis coordinate is bigger or equal to P003 parameter value (positive travel limit value), then Z axis can not move in the positive direction, only negative. If Z axis coordinate system is smaller or equal to P004 parameter value (negative travel limit value), then Z axis can not move in the negative direction, only positive.

The initialization setting: 8000.000/-8000.000mm

REMARK

Although the travel limit range is 8000.000-（-8000.000）=16000.000, relative moving distance can not exceed 8000mm.

6.1.2.3 Parameter P005----X axis rapid traverse rate

P005 parameter sets X axis manual rapid speed and rapid traverse speed in G00 command, the actual rapid traverse speed of X axis is also controlled by rapid override, that is, actual rapid speed of X axis = P005 X rapid override.

The initialization setting: 6000mm/min

6.1.2.4 Parameter P006----Z axis rapid traverse rate

P006 parameter sets Z axis manual rapid speed and rapid traverse speed in G00 command. Actual rapid traverse speed of Z axis is also controlled by rapid override, that is, actual rapid traverse movement speed of Z axis=P006 X rapid speed override.

Initialization setting: 6000mm/min.

6.1.2.5 Parameter P007----X axis zero return rapid traverse rate

P007 parameter sets the rapid feedrate of X axis in Machine zero mode.

Initialization setting: 6 0 0 0 mm/min

6.1.2.6 Parameter P008----Z axis zero return rapid traverse rate

P008 parameter sets the rapid feedrate of Z axis in Machine zero mode.

Initialization setting: 6 0 0 0 mm/min

6.1.2.7 Parameter P009---- X axis zero return at low speed

P009 parameter sets X axis the lowest feedrate of returning to home position in Machine zero mode.

Initialization setting: 100 mm/min

6.1.2.8 Parameter P010----Z axis zero return at low speed

P010 parameter sets Z axis the lowest feedrate of returning to home position in Machine zero mode.

Initialization setting: 100mm/min

6.1.2.9 Parameter P011----Time of acceleration and deceleration for X axis rapid traverse

P011 parameter sets X axis G00 or the time of acceleration from stillness to the specified speed in Jog mode.

The bigger the P011 value is, the longer X axis acceleration requires. On the basis of satisfying the loading specialty, the P011 value should be reduced for increasing the processing efficiency.

Initialization setting: 250ms

6.1.2.10 Parameter P012----Time of acceleration and deceleration for Z axis rapid traverse

P012 parameter sets Z axis G00 or the time of acceleration from stillness to the specified speed in Jog mode.

The bigger the P012 value is, the longer Z axis acceleration requires. On the basis of satisfying the loading specialty, the P012 value should be reduced for increasing the processing efficiency.

Initialization setting: 250ms.

6.1.2.11 Parameter P013----Time of acceleration and deceleration for X axis cutting feed

P013 parameter sets the time of acceleration from stillness to the specified speed by G01 command during automatic machining.

Initialization setting: 250ms.

6.1.2.12 Parameter P014----Time of acceleration and deceleration for Z axis cutting feed

P014 parameter sets the time of acceleration from stillness to the specified speed by G01 command during automatic machining.

Through adjusting the parameter from P005 to P014, the system can adapt to the different motor or loading machine for improving the efficiency.

Initialization setting: 250ms.

6.1.3 Drive parameters

The parameters of the group mainly set the relative parameter of the feed screw and gear-driven system.

6.1.3.1 Parameter P015----X axis feed screw pitch

Parameter P015 sets machine X axis feed screw to circumrotate one full circle, and executes the straight distance which parts track.

Initialization setting: 5,000mm

6.1.3.2 Parameter P016----Z axis feed screw pitch

Parameter P016 sets machine Z axis feed screw to circumrotate one full circle, and executes the straight distance which parts track.

Initialization setting: 5,000mm

6.1.3.3 Parameters P017 and P018----the backlash data of X and Z axes

Respectively, P017 and P018 parameters set the mechanical drive backlash data of X and Z axes.

Since the machine drive parts of feed screw and reducer can not avoid the backlash, the parameters of P017 and P018 are to compensate the error due to the backlash. Through setting the two parameters, when the machine changes its direction during movement, and CNC system automatically compensates the backlash error.

The mechanical drive backlash of machine can be measured through the following method; X axis is taken as an example:

- Select Jog mode and proper feedrate;
- Install the percentage gauge in the proper position of the machine, move the socket of grinding wheel until pressing the measuring head of percentage gauge, and set the index of percentage

gauge to zero.

● Select the manual single step mode for 1.0mm;

● Press manual direction key of X axis, and grinding wheel moves towards the percentage gauge, then the index of percentage gauge turns a round and points zero.

● Press manual feeding key of X axis and move towards the reverse direction, the index of percentage gauge turns back. Because of the gap, the index can not return to zero point. Then, the gap between zero and the position which percentage gauge index points is X axis backlash data.

REMARK

1. The above steps should be repeated several times to guarantee the accuracy.
2. The measuring method of Z axis backlash is same.
3. The max value of actual backlash compensation data is half of follow error value.

6.1.3.4 Parameters P019 and P020----gear number of X axis motor and that of feed screw

P019 and P020 are used for setting the electronic gear ratio of X axis in the system. If the motor and X axis feed screw adopt the transmission of gear or belt, then P019 is the gear number of motor or belt wheel, P020 is the gear number of feed screw or belt wheel.

The electronic gear ratio of system= P019/P020

If the motor of X axis and feed screw directly connect by coupling, then the value of P019 and P020 should be same.

Initialization setting: 10/10

6.1.3.5 Parameters P021 and P022----gear number of Z axis and that of feed screw

P021 and P022 are for setting the electronic gear ratio of Z axis in the system. If the motor and feed screw of Z axis adopts gear belt transmission, then P021 is the gear number of motor and belt wheel, P022 is the gear number of feed screw or belt wheel.

The electronic gear ratio of system=P021/P022

If the motor of Z axis and feed screw connect by coupling directly, then the value of P019 and P020 should be same.

Initialization setting: 10/10

6.1.4 Servo parameters

The servo parameter is mainly for optimizing the performance of servo motor.

6.1.4.1 Parameter P023---- X axis speed sensitivity

Parameter P023 is for setting the sensitivity which is input by analog voltage of the X axis servo drive. The parameter must comply with the gain command input of analog capacity speed in the drive, which is the maximum analog voltage input value of servo drive.

The speed sensitivity of servo drive= rated speed of motor/ analog maximum voltage input value which is normally 10V.

Initialization setting: 300rpm/V

6.1.4.2 Parameter P024---- Z axis speed sensitivity

P024 parameter is for setting the sensitivity which is input by analog voltage of Z axis servo drive. The parameter must comply with the gain command input of analog capacity speed in the drive, which is the maximum analog voltage input value of servo drive.

The speed sensitivity of servo drive= rated rotate speed of motor/ analog maximum voltage input value which is normally 10V.

Initialization setting: 300rpm/V.

6.1.4.3 Parameter P025----pulses of X axis coder

P025 parameter specifies the feedback coder pulses of X axis motor.

Initialization setting: 10000

6.1.4.4 Parameter P026----pulses of Z axis coder

P026 parameter specifies the feedback coder pulses of Z axis motor.

Initialization setting: 10000

6.1.4.5 Parameter P027---- X axis compensation zero offset

P027 parameter is used for compensating the voltage offset of X axis motor at zero speed. When the command of zero speed is sent by system to drive, the program coordinate system and machine offset due to the reference voltage offset. Through zero offset compensation, the zero offset of machine coordinate system can be eliminated.

Initialization setting: 32768

6.1.4.6 Parameter P028----Z axis compensation zero offset

P028 parameter is for compensating the voltage offset of Z axis motor at zero speed.

Initialization setting: 32768

6.1.4.7 Parameter P029----X axis scale factor

P029 parameter sets the scale gain of X axis speed loop adjustor in the system.

Initialization setting: 8

6.1.4.8 Parameter P030----Z axis scale factor

P030 parameter sets the scale gain of Z axis speed loop adjustor in the system.

Initialization setting: 8

6.1.4.9 Parameter P031---- X axis integral coefficient

P031 parameter sets integral time constant of adjustor of X axis speed loop in system.

Initialization setting: 0

6.1.4.10 Parameter P032---- Z axis integral coefficient

P032 parameter sets integral time constant of adjustor of Z axis speed loop in system.

Initialization setting: 0

6.1.4.11 Parameter P033---- X axis differential coefficient

P033 parameter sets differential time constant of adjustor of X speed loop axis in system.

Initialization setting: 0

6.1.4.12 Parameter P034---- Z axis differential coefficient

P034 parameter sets differential time constant of adjustor of Z axis speed loop in system.

Initialization setting: 0

6.1.4.13 Parameter P035---- X axis integral saturation

P035 parameter sets the limit value of integral accumulation of X axis adjustor.

Initialization setting: 0

6.1.4.14 Parameter P036----Z axis integral saturation

P036 parameter sets the limit value of integral accumulation of Z axis adjustor.

Initialization setting: 0

6.1.4.15 Parameter P037---- X axis speed feed forward

Parameter P037 sets the feed forward coefficient of servo motor speed loop of X axis in system. If the parameter setting is not correct, it easily results in the vibration or big follow error.

Initialization setting: 2 5 6

6.1.4.16 Parameter P038----Z axis speed feed forward

Parameter P037 sets the feed forward coefficient of servo motor speed loop of Z axis in system. If the parameter setting is not correct, it easily results in the vibration or big follow error.

Initialization setting: 2 5 6

6.1.4.17 Parameter P039----X axis follow error

P039 parameter sets the maximum follow error of X axis in the closed-loop system. If the error of X axis exceeds the setting value of P039, the system pops up the alarm dialogue box: *X axis overrun,* and moving axis stops feeding.

Initialization setting: 1000.

6.1.4.18 Parameter P040----Z axis follow error

P040 parameter sets the maximum follow error of Z axis in the closed-loop system. If the error of Z axis exceeds the setting value of P040, the system pops up the alarm dialogue box: *Z axis overrun,* and moving axis stops feeding.

Initialization setting: 1000.

6.1.5 Other parameters

6.1.5.1 Parameters P041, P042 and P043----bit parameters 1, 2 and 3

Some control function of CNC system can execute different control functions to adapt to the various requirements of different machines through resetting or placing 1 in the parameter P041 ~ P043.

The parameter bits from left to right are D7—D0, totally 8 digits and each digit can be set to 0 or 1.

The introduction of P041 bit is shown in Table 6-1:

Table 6-1 Introduction of P041 bit

D7	D6	D5	D4	D3	D2	D1	D0
UrgentDirection	UrgentAxis	HomePolarZ	HomePolarX	EncodePolarZ	MotorPolarZ	EncodePolarX	MotorPolarX

Initialization setting：0 0 0 0 0 0 0 0

Introduction of P041 bit:

●Motor Polar X 1—Servo drive receives the analog command in positive direction
0—Servo drive receives the analog command in negative direction

● Encode Polar X 1—Positive direction coder counting value
0---Negative direction coder counting value

● Motor Polar Z 1—Servo drive receives the analog command of positive direction
0—Servo drive receives the analog command of negative direction

● Encode Polar Z 1—Positive direction coder counting value
0---Negative direction coder counting value

● Home Polar X 1----X axis zero return in positive direction
0---X axis zero return in negative direction

● Home Polar Z 1----Z axis zero return in positive direction
0---Z axis zero return in negative direction

● Urgent Axis 1---Z axis urgent retraction
0---X axis urgent retraction

● Urgent Direction 1---Urgent retract in positive direction
0---Urgent retract in negative direction

REMARK

The polar of coder should match with that of motor; otherwise the servo loop control is not working. When the axis control direction is reverse, it can get the reverse direction through adjusting the polar of motor and coder.

The introduction of P042 bit is shown in the Table 6-2:

Table 6-2 Introduction of P042 bit

D07	D06	D05	D04	D03	D02	D01	D0
Z Home2	Z Home1	Z Home0	X Home2	X Home1	X Home0	Engager	DiameterX

Initialization setting: 0 0 0 0 0 0 0 1

Introduction of P042 bit:

●D0 Diameter X Mark bit of X axis diameter programming

●D1 Engager Preset parameter

●D4~D2 X Home 2 ~~X Home 0 X axis zero return type

●D7~D5 Z Home 2 ~~X Home 0 Z axis zero return type

Sequence displacement diagram of different zero return types are as below, and take Z axis as an example:

① Zero return type: 000, i.e. D7~~D5=000

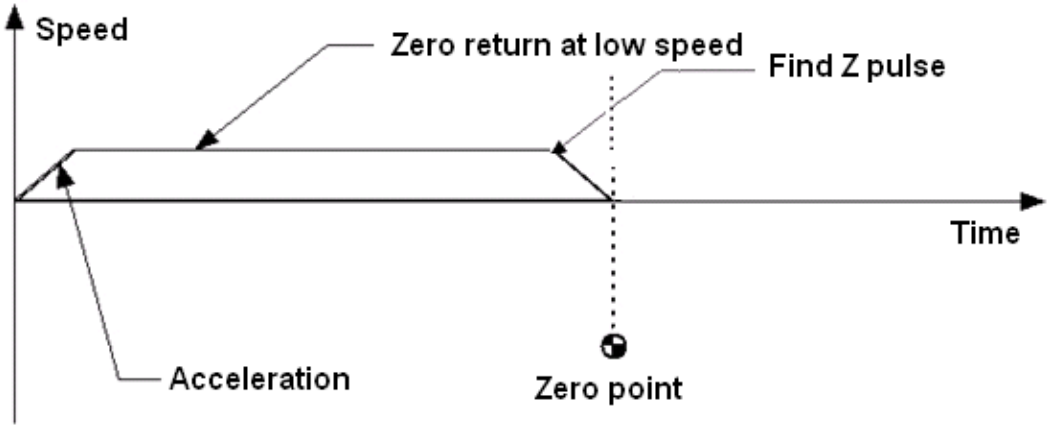

Press , Z axis automatically returns to zero. No matter whether the inductive signal is received or not, the system coder automatically stops when it detects the latest Z pulses according to the direction set by P041. And it sets the current position of Z axis as the machine zero point of Z axis. Normally, this type is test mode.

②Zero return type: 001, i.e. D7~~D5=001

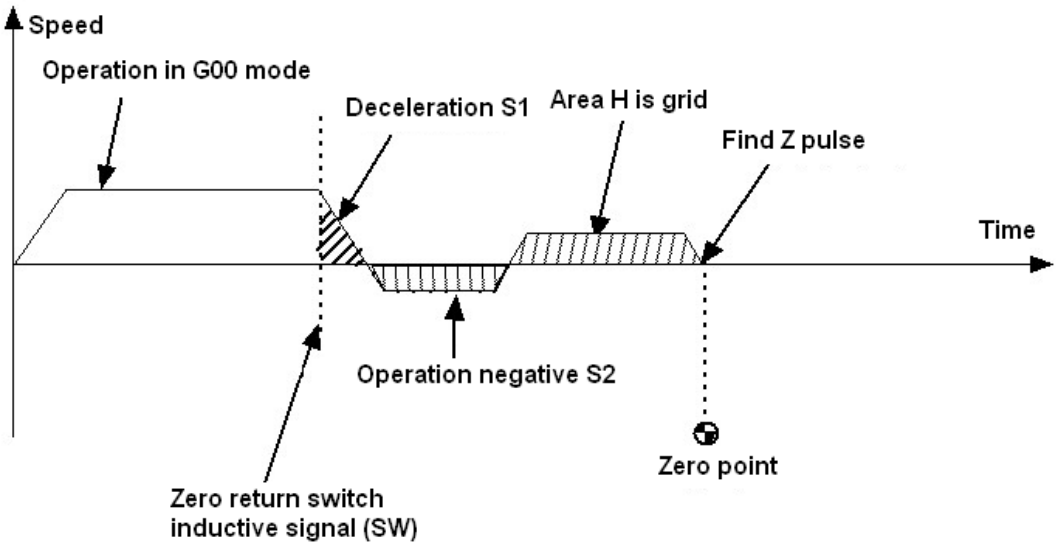

Press , Z axis automatically returns to zero at set rapid feedrate. When receiving the rising edge signal of zero return switch, the system decelerates and stops, the area is S1. Then the system runs at low speed in the reverse direction and returns the rising position of zero-return switch, the area is S2, and then it runs in zero direction. When the coder detects Z pulse signal and the area is H, the system stops running. The current position of Z axis is machine zero point, then S1=S2, H is grid. If the grinding wheel is very big, there exists some offset and machine is off from the zero-return signal.

③ Zero return type: 010, i.e. D7~~D5=010

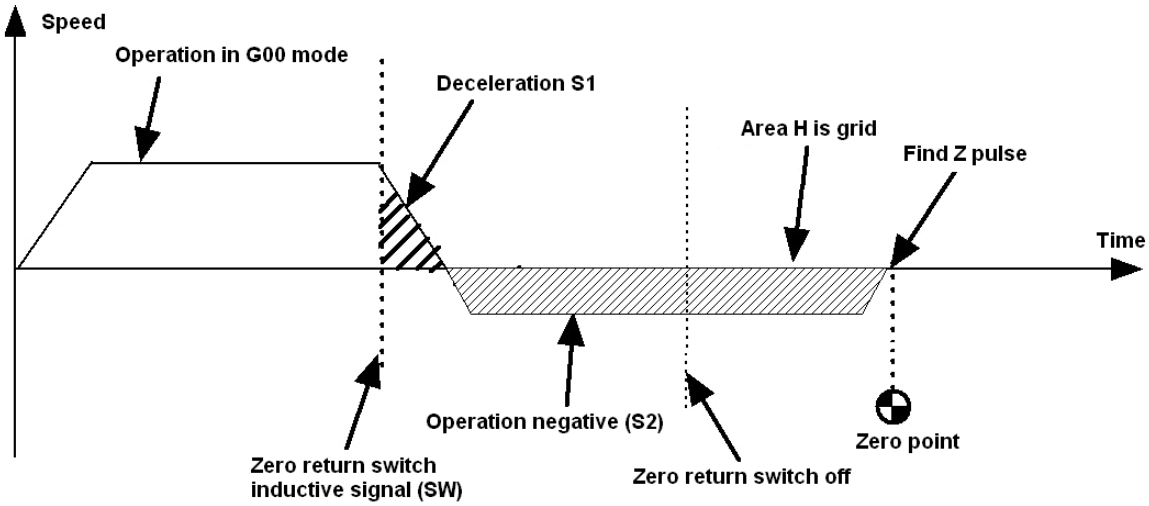

Press , Z axis automatically returns to zero at set rapid feedrate, when receiving the rising edge signal of zero return switch, the system decelerates and stops, and the area is S1. Then the system runs at low speed in the reverse direction and returns the rising edge of zero return switch, and the area is S2. And then it runs reversely apart from the zero return switch. When the coder detects Z pulse signal and the area is H, the system stops running. The current position of Z axis is machine zero point, and S1=S2, H is grid.

④ Zero return type 011, i.e. D7～D5=011.

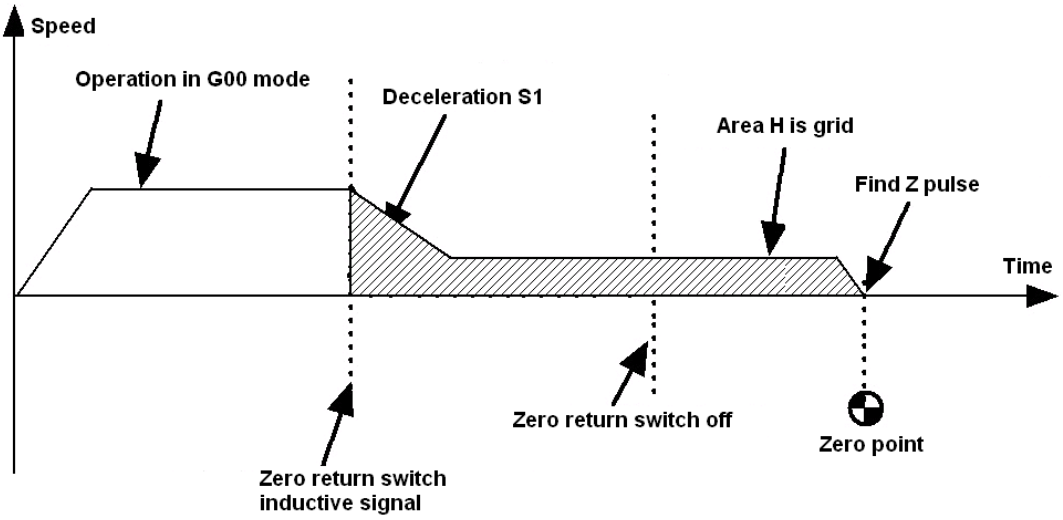

Press , Z axis automatically returns to zero at the set rapid feedrate, when receiving the inductive signal of zero return switch, the system decelerates until leave the zero return switch. After leaving the zero return switch, the coder detects Z pulse signal, and the area is H. Finally, the system stops running. The current position of Z axis is machine zero point. Then, H is grid.

The introduction of parameter P043 bit is shown in Table 6-3:

Table 6-3 Introduction of P043 bit

D07	D06	D05	D04	D03	D02	D01	D0
ZHWheelRem	XHWheelRem	ZHomeAlarm	XHomeAlarm	Engager	CAutoStatic	ZAutoStatic	XAutoStatic

Initialization setting: 0 0 1 1 0 0 0 0

Introduction of parameter P043 bit

● X Auto Static Switch of X axis static error automatic adjustment
1---automatic static error adjustment of X axis
0---manual static error adjustment of X axis

● Z Auto Static Switch of Z axis static error automatic adjustment
1---automatic static error adjustment of Z axis
0---manual static error adjustment of Z axis

● C Auto Static Spindle static error automatic adjustment switch
1---automatic static error adjustment of main axis
0---manual static error adjustment of spindle

● Engager Preset parameter

● X home Alarm X axis start zero return switch
1---During start, not display information: X axis compulsory zero return
0---During start, display information: X axis compulsory zero return

● Z home Alarm Z axis start zero return switch
1---During start, not display information: Z axis compulsory zero return
0---During start, display information: Z axis compulsory zero return

● X H Wheel Rem X axis MPG memory switch
1---X axis MPG memory
0---X axis MPG free of memory

● Z H Wheel Rem Z axis MPG memory switch
1---Z axis MPG memory
0---Z axis MPG free of memory

6.1.5.2 **Parameters P044, P045 and P046----bit parameters 4, 5 and 6**

"Preset" and other bit parameter without the detailed description is defaulted or specified parameter. If the system works normally, it is not allowed to change. If it is required rewriting, please modify them under the guide of the professional.

Table 6-4 Introduction of P044 bit

D07	D06	D05	D04	D03	D02	D01	D0
BkldisORPul	ScarerSelect	Extand HW Sel	Circle Num Disp	Engager	Engager	Control Bit	ShowMode

Initialization setting: 0 0 0 0 0 0 0 0

Introduction of parameter P043 bit:

● ShowMode Display mode selection 1---English interface display selection
0---Chinese interface display selection

● Control bit Z axis control mode selection 1—A axis rotation axis
0—Z axis straight axis

●Engager Preset parameter

●Engager Preset parameter

● Circum Num Disp Display number of revolution circles

●Extend HW Sel External extended MPG 1- select external extended MPG
0-not select external extended MPG

●Engager Preset parameter

●Scarer Select Measurer buttons control selection
1---The axial direction and selection of measuring instrument
0---The radial direction and selection of measuring instrument

●BkldisORPul Selecting compensation amount type in pitch error compensation
1---pulses 0---distance

Introduction of P045 bit parameter; it is shown in table 6-5:

Table 6-5 Introduction of P045 bit

D07	D06	D05	D04	D03	D02	D01	D0
ControlMode1	ControlMode0	C Home2	C Home1	C Home0	HomePolarC	EncodePolarC	MotorPolarC

Initialization setting: 1 1 0 0 0 0 0 0

Introduction of parameter P045 bit:

● D0 Motor Polar C 1---Spindle servo drive receives positive analog command
0---Spindle servo drive receives reverse analog command

● D1 Encode Polar C 1---Spindle positive coder counting value
0---Spindle reverse coder counting value

● D2 Home Polar C Spindle mechanical zero return direction

1---spindle zero return in positive direction

0---spindle zero return in negative direction

● D5~~D3 C Home2~~ C Home 0 Spindle zero return mode

（About the mode, refer to parameter P042）

● D7～D6 Control Mode11~ Control Mode10

Spindle control modes 00---spindle control; 01---position axis control

10---rotation axis control; 11---two axes mode

REMARK

P045 is the matching parameter for second spindle usage or the other parameter control mode of system extension, make sure to use the corresponding axis control mode, and then it can be rewritten. The detailed usage method and parameter adjustment, refer to the spindle axis parameter setting in chapter 9th.

6.1.5.3 Parameters P047 and P048---- pitch error compensation origins of X and Z axes

The pitch error compensation origin is the position of the pitch error compensation reference position in the compensation list. According to the mechanical requirements, each axis can be set at any position from 0 to 255.

Parameters P047 and P048 respectively specify the pitch error compensation origins of X and Z axes.

Initialization setting: 0

6.1.5.4 Parameters P049 and P050----pitch error compensation interval of X and Z axes

The pitch error compensation interval is between two measured pitch errors. The parameter P049 and P050 respectively specify the pitch error compensation interval of X and Z axes.

Initialization setting: 0

6.1.5.5 Parameter P051----X axis inclination angle

P051 parameter sets the inclination angle between X axis and radial direction.

Initialization setting: 0

6.1.5.6 Parameter P052----Z axis inclination angle

P052 parameter sets the inclination angel between Z axis and axial direction.

Initialization setting: 0

6.1.5.7 Parameter P053----X axis grid

P053 parameter shows the grid of X axis mechanical zero return. The ideal value is half of the screw pitch of X axis feed screw. When the grid is too small or too big, then the mechanical zero point is not proper, the position of sliding block should be adjusted to avoid that the zero return is not in the position.

Initialization value: 0

6.1.5.8 Parameter P054----Z axis grid

P045 parameter shows the grid of Z axis mechanical zero return. The ideal value is half of the screw pitch of Z axis feed screw. When the grid is too small or too big, then the mechanical zero point is not proper, the position of the sliding block should be adjusted to avoid that the zero return is not in the position.

Initialization value: 0

6.1.5.9 Parameter P055---rapid retraction distance

P055 sets the rapid retraction axis and the distance during retraction.

Initialization setting: 10.000

6.1.5.10 Parameter P056----spindle brake signal time

Parameter P056 specifies the duration of brake signal when outputting spindle brake signal.

Initialization setting: 10

6.1.5.11 Parameter P057----M code pulse time

Parameter P057 specifies the duration of pulse signal when the control mode of main shaft and cooling fluid is pulse mode.

Initialization setting: 10

6.1.5.12 Parameter P058----interval between program serial numbers

Parameter P058 specifies the interval that the serial number (block number) of block is increased automatically in Edit mode.

Initialization setting: 10

REMARK

The following parameter P059~~P080 is the setting parameter for the third axis function. When 3 axes control is selected by the third bit of bit parameter P043, this parameter can be called. The parameter setting should correspond to the control mode; refer to the parameter setting option of the second spindle in the manual chapter 9th.

6.1.5.13 Parameter P059----spindle trial running speed

Parameter P059 provides speed setting of servo spindle trial running, control spindle and output the default speed, which can be set in Jog mode, and the range is from 0 to 2500. Through the parameter, it can control the spindle to output the speed in Jog mode and the speed is defaulted.

Initialization setting: 100

6.1.5.14 Parameter P060----spindle grid

Parameter P060 sets the grid of spindle mechanical zero return. The ideal value is half of the screw pitch of X axis feed screw. When the grid is too small or too big, it means the mechanical zero point is not reasonable, the position of sliding block should be adjusted again to avoid that the zero return is not in the position.

Initialization setting: 0

6.1.5.15 Parameter P061---- spindle speed sensitivity

Parameter P061 is for setting the analog voltage sensitivity of the spindle servo drive. The parameter must correspond to the speed command input gain of drive analog value.

Speed sensitivity of servo drive=motor rated speed/ maximum input value of analog voltage, which is normally 10V.

Initialization setting: 300rpm/V.

6.1.5.16 Parameter P062----pulses of spindle coder

Parameter P062 specifies the pulses of feedback coder in the spindle motor.

Initialization setting: 10000

6.1.5.17 Parameters P063 and P064----stroke limit value of spindle in positive and negative direction

Parameter P063 and P064 respectively sets the spindle as the maximum stroke in positive and negative directions when the spindle is controlled as position axis.

Initialization setting: 8000.00/-8000.000mm

6.1.5.18 Parameter P065----spindle rapid traverse rate

Parameter P065 sets the manual rapid speed and the axis actual speed of rapid traverse movement in manual rapid or G00 mode when the spindle is at the position axis or rotation axis controls. The speed is also controlled by rapid override, the spindle actual rapid speed = P065 X rapid override.

Initialization setting: 6000mm/min

6.1.5.19 Parameter P066----spindle zero return rapid traverse rate

Parameter P066 sets the operation of mechanical zero return and the rapid feedrate of zero return

when the spindle is set the position axis or the rotation axis controls.

Initialization setting: 6000mm/min

6.1.5.20 Parameter P067----spindle zero return traverse rate at low speed

Parameter P067 sets the operation of mechanical zero return and the lowest feedrate of zero return when the spindle is the position axis or the rotation axis controls.

Initialization setting: 100mm/min

6.1.5.21 Parameter P068----time of acceleration and deceleration during spindle rapid feeding

Parameter P068 sets the time from stillness to the given speed in G00 or Jog mode when the spindle is the position axis or rotation axis controls. The bigger the value of P021 is, the longer the Z axis accelerates. On the base of loading, the value of P012 should be reduced as small as possible to improve the efficiency.

Initialization setting: 250ms

6.1.5.22 Parameter P069----time of acceleration and deceleration during spindle cutting feed

Parameter P069 sets the time from stillness to the speed specified by G01 cutting command during automatic machining when the spindle is in the position axis, rotation axis controls.

Initialization setting: 250ms

6.1.5.23 Parameter P070----spindle zero offset compensation

Parameter P070 is for compensating the voltage offset of spindle motor at zero speed. When the system outputs zero speed command to the drive unit, there is the offset between the system programs and the machine coordinates due to the offset of datum voltage. The zero point offset of mechanical coordinate can be eliminated through compensation.

Initialization setting: 32768

6.1.5.24 Parameter P071----spindle scale factor

Parameter P071 sets the scale gain of speed loop adjuster when the spindle is taken as servo closed-loop control.

Initialization setting: 8

6.1.5.25 Parameter P072----spindle integral coefficient

Parameter P072 sets the integral time constant of speed loop adjuster when the spindle is servo closed-loop control.

Initialization setting: 0

6.1.5.26 Parameter P073----spindle differential coefficient

Parameter P073 sets the differential coefficient time constant of speed loop adjustor when the spindle is servo closed-loop control.

Initialization setting: 0

6.1.5.27 Parameter P074----spindle integral saturation

Parameter P074 sets the integral cumulative limit value of adjustor when the spindle is servo closed-loop control.

Initialization setting: 0

6.1.5.28 Parameter P075----spindle speed forward feed

Parameter P075 sets the forward feed coefficient of servo motor speed loop, and spindle is the servo closed-loop control. If the parameter setting is not reasonable, it easily causes the vibration and many follow errors.

Initialization setting: 256

6.1.5.29 Parameter P076----spindle follow error

Parameter P076 sets the maximum follow errors of axis, when spindle is servo closed-loop control. If the axis errors exceed setting value, the system alarms: *The spindle overruns*, and the moving axis and stops feeding.

Initialization setting: 1000

6.1.5.30 Parameter P077----spindle feed screw pitch

Parameter P077 sets the spindle as position axis control, then the control axis which is corresponding to the axis rotates a full round and implements the distance of straight line which spare parts tracks.

Initialization setting: 5.000 mm

6.1.5.31 Parameter P078----spindle backlash value

Parameter P078 sets the backlash value of axis mechanical transmission, when the spindle is position axis control.

Initialization setting: 0.000mm

6.1.5.32 Parameter P079----gear number of spindle motor/linear feed screw

Parameter P079 and P080 are for setting the electronic gear ratio setting of spindle in system. If the motor of axis and feed screw adopt the gear or belt for transmission, P079 is for motor or belt wheel gear number, and then P080 is feed screw or belt wheel gear number.

The electronic gear ratio of the system=P079/P080

If the shaft of motor and feed screw is connected by shaft coupling, then P070 and P080 should be

set the same value.

Initialization setting: 10/10

6.1.6 X axis pitch error compensation

Parameters P100~~355 are corresponding to X000~~X255 pitch error compensation points of X axis. About setting, refer to the appendix of the pitch error compensation.

6.1.7 Z axis pitch error compensation

Parameters P400~~655 are corresponding to Z000~~Z255 pitch error compensation points of Z axis. About setting, refer to the appendix of the pitch error compensation.

6.1.8 Macro variable in floating-point type

Parameter P701~~900 is corresponding to #001~~#200 of floating point type. Regarding to the method of usage, refer to section 3.5 of Macro variable in *The Programming Manual*.

6.1.9 Macro variables in integral type

Parameter P8011~~840 is corresponding to #201~~#240 integral macro variable. Regarding to the method of usage, refer to section 3.5 of Macro variable in *The Programming Manual*.

REMARK

1. The gear number ratio between the motor and the feed screw should be more than 0.1, less than 256.

2. After some parameters are rewritten, the screen automatically prompts that the parameter is valid after restarting. If there isn't any display, then it exits the parameter mode, the new parameter values are valid.

All parameter characteristics in the system are shown in Table 6-6.

Table 6-6 The users' parameter list

CATEGORY OF PARA.	NO. OF PARA.	PARAMETER NAME	UNIT	INITIAL VALUE	RANGE
Users' password					
P001~P014 Move parameter	P001	X axis positive max stroke	mm	8000.000	0~8000.000
	P002	X axis negative max stroke	mm	-8000.000	0~-8000.000
	P003	Z axis positive max stroke	mm	8000.000	0~8000.000

	P004	Z axis negative max stroke	mm	-8000.000	0~-8000.000
	P005	X axis rapid speed	mm/min	6000	0~8000
	P006	Z axis rapid speed	mm/min	6000	0~8000
	P007	X axis zero return rapid feedrate	mm/min	6000	0~8000
	P008	Z axis zero return rapid feedrate	mm/min	6000	0~8000
	P009	X axis zero return feedrate at low speed	mm/min	100	0~1000
	P010	Z axis zero return feedrate at low speed	mm/min	100	0~1000
	P011	Time of acceleration and deceleration of X axis speeding	ms	250	8~999
	P012	Time of acceleration and deceleration of Z axis speeding	ms	250	8~999
	P013	Time of acceleration and deceleration of X axis cutting, feeding	ms	250	8~999
	P014	Time of acceleration and deceleration of Z axis cutting, feeding	ms	250	8~999
P015~P022 Transmission parameter	P015	Screw pitch of X axis feed screw	mm	5.000	1.000~10.000
	P016	Screw pitch of Z axis feed screw	mm	5.000	1.000~10.000
	P017	Backlash of X axis	mm	0	0~10.000
	P018	Backlash of Z axis	mm	0	0~10.000
	P019	Gear number of X axis motor	number	10	0~255
	P020	Gear number of X axis feed screw	number	10	0~255
	P021	Gear number of Z axis motor	number	10	0~255
	P022	Gear number of Z axis feed screw	number	10	0~255
P023~P040 Servo Parameter	P023	Sensitivity of X axis speed	rpm/v	300	75~600
	P024	Sensitivity of Z axis speed	rpm/v	300	75~600
	P025	Pulses of X axis coder	line number	10000	1000~16384
	P026	Pulses of Z axis coder	line number	10000	1000~16384
	P027	Zero offset compensation of X axis		32768	32768±768
	P028	Zero offset compensation of Z axis		32768	32768±768
	P029	X axis proportion coefficient		8	0~65535
	P030	Z axis proportion coefficient		8	0~65535

	P031	X axis integral coefficient		0	0~65535
	P032	Z axis integral coefficient		0	0~65535
	P033	X axis differential coefficient		0	0~65535
	P034	Z axis differential coefficient		0	0~65535
	P035	Saturation of X axis integral		0	0~65535
	P036	Saturation of Z axis integral		0	0~65535
	P037	X axis speed feed forward		256	0~65535
	P038	Z axis speed feed forward		256	0~65535
	P039	X axis follow errors		1000	0~30000
	P040	Z axis follow errors		1000	0~30000
P041~P058 Other parameter	P041	Bit parameter 1		00000000	0~11111111
	P042	Bit parameter 2		00000001	0~11111111
	P043	Bit parameter 3		00110000	0~11111111
	P044	Bit parameter 4		00000000	0~11111111
	P045	Bit parameter 5		11000000	0~11111111
	P046	Bit parameter 6		00000000	0~11111111
	P047	X axis pitch error compensation origin		0	0~255
	P048	Z axis pitch error compensation origin		0	0~255
	P049	X axis pitch error compensation interval	mm	0	0~65.535
	P050	Z axis pitch error compensation interval	mm	0	0~65.535
	P051	X axis bevel	degree	0	0~45.000
	P052	Z axis bevel	degree	0	0~45.000
	P053	X axis grid	mm	0.000	0.000~10.000
	P054	Z axis grid	mm	0.000	0.000~10.000
	P055	Distance of rapid retraction	mm	10.000	0~65.535
	P056	Brake time of spindle	0.1s	10	
	P057	Time of M code	0.1s	10	1~999
	P058	Interval of number		10	
P059~P080 Other parameters	P059	Spindle trial running speed	mm	100	0~2500
	P060	Amount of spindle	mm	0.000	0.000~10.000
	P061	Spindle sensitivity	rpm/v	300	75~600

	P062	Coder of spindle	line number	10000	1000~16384
	P063	Positive limit of spindle	mm	8000.000	0~8000.000
	P064	Negative limit of spindle	mm	-8000.000	0~-8000.000
	P065	Spindle rapid	mm/min	6000	0~8000
P059~P080	P066	Spindle zero return rapidly	mm/min	6000	0~8000
	P067	Spindle zero return at low speed	mm/min	100	0~1000
	P068	Acceleration time of spindle speeding	ms	250	8~999
	P069	Acceleration time of spindle cutting	ms	250	8~999
	P070	Spindle zero offset compensation		32768	32768±768
	P071	Proportion coefficient of spindle		8	0~65535
	P072	Integral coefficient of spindle		0	0~65535
	P073	Differential coefficient of spindle		0	0~65535
	P074	Saturation of spindle		0	0~65535
	P075	Feed forward of spindle speeding		256	0~65535
	P076	Follow errors of spindle		1000	0~30000
	P077	Screw pitch of spindle	mm	5.000	1.000~10.000
	P078	Interval of spindle	mm	0	0~10.000
	P079	Gear number of spindle motor	no	10	0~255
	P080	Gear number of spindle guide screw	no	10	0~255

Category of parameter	Parameter number	Initial value	Range
X axis pitch error compensation	P100~P355	0	-8000~8000
Z axis pitch error compensation	P400~P655	0	-8000~8000
Macro variable of floating point type	P701~P800	0.000	-9999.999~9999.999
Macro variable of integral type	P801~P840	0	0~9999

6.2 Inputting parameters

Before the system is delivered from the factory, all the parameters are default. And they should be modified based on the actual situation after they are installed on the machine.

The steps of the parameter inputting:

● Select the parameter setting mode;

● Press ⇧ ⇩ and move the high-lighted part to the parameter number which is required to be modified. Press INPUT , then the screen user input data prompts *Input parameter value:*

● Input the parameter data through keypad, if the input is not correct, press ⇦ to delete the incorrect data and then input the correct one.

● Press ENTER to specify.

● Press ESC ⇧ or ⇩ to exit the parameter inputting at will and return to the parameter selection status.

For example: rewrite the parameter P006 to **4500**.

(1) Press ⇧ ⇩ to move the high-lighted parts to P006.

(2) Press INPUT , the screen prompts *Input parameter value:*

(3) Input 4 5 0 0 through keypad;

(4) Press ENTER , parameter P006 is changed into 4500.

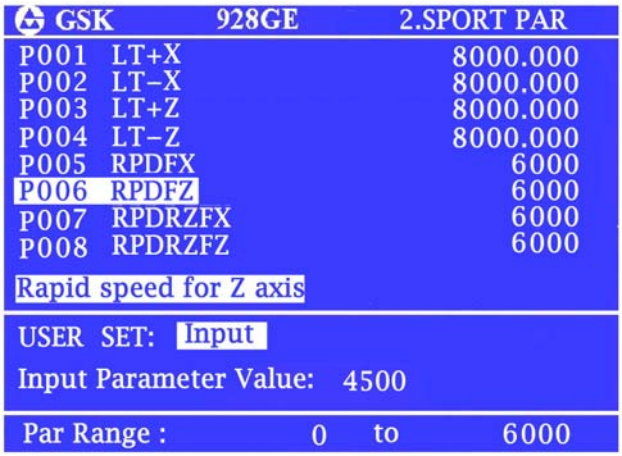

6.3 Initializing parameters

When switch it on for the first time or the parameter of system had some problems due to some

reasons, it may use the parameter initialization function, then all the parameter is set as default of system and reset working area of system. The operational steps are as below:

(1) Press // and DELETE at the same time;

(2) Firstly, release //, then the screen prompts *Initializing para……*

(3) When the screen prompts *Para initialization over!* Then release DELETE and complete parameter initialization.

6.4 Rewriting bit parameters

The meaning of each bit parameter has been shown on the screen and the content of each bit parameter can be changed directly.

(1) Press ⇧ ⇩ to move the cursor to the bit parameter P041, P042 or P043.

(2) Press ⇧ ⇩, the selected parameter is shown highlighted and the meaning is displayed bottom.

(3) Press ⇦ ⇨ to move the cursor left or right to select different bits, and the selected bit's meaning varies.

(4) Press 0 or 1 to change the value which is directly pointed by cursor to 0 or 1, the cursor points the next one automatically.

(5) Press ⇧ ⇩, the cursor points to the next parameter.

For example, rewrite the forth bit of parameter P041 to 1.

① Press cursors ⇧ ⇩ to select bit parameter P041;

② Press cursors ⇦ ⇨ to select the forth bit of P041 and at the same time, the bit meaning of the parameter is displayed as below:

③ Input 1 can change directly and the cursor points the next one automatically.

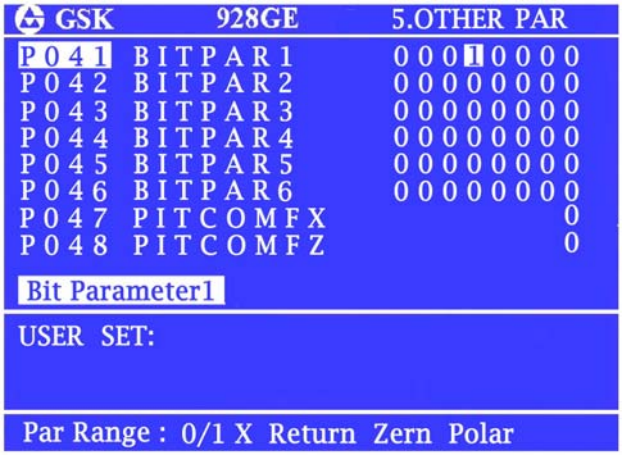

6.5 Method of inputting parameters

All the parameter has three methods to input:

(1) Covering mode: Press INPUT to input the figures and cover the original value and press ENTER to specify;

(2) Addition and subtraction mode: Press INPUT and REW, input the numerical value and press ENTER to specify, the parameter is the summation of the original value and the input one;

(3) Fine tuning mode: Press cursor ⇦ or ⇨ to add or subtract one unit of the original value. If

the original value is integral, the extent of addition and subtraction is 1; if the original value is decimal fraction, the extent of addition and subtraction is 0.001. Finally, press ENTER to specify.

REMARK

Press INPUT , the input mode of parameter is defaulted as covering mode.

Press REW , it can be switched between covering mode and addition and subtraction mode, the interface shows the dialogue respective two statuses for input and addition and subtraction.

6.6 Backup and restoring parameters

It includes the backup and restoring function of system parameter and PLC user's program.

Press mode selection key PARAM to enter the parameter setting mode.

Press ⇧ or ⇩, it can switch between backup and operation interfaces of the parameter setting, the parameter, PLC program.

Press cursors ⇧ or ⇩ to select the target status which is required to execute, then press ENTER to specify. If the backup operation is OK, the screen prompts *Backup is over!* It can change to other interfaces or perform the other operations; and if the restoring operation is OK, the screen prompts *Restoring completes, restart the system.* After restarting system, the other operations can be executed.

REMARK

After rewriting the system parameter and PLC program, the screen prompts *The parameter is valid after restarting.* Only the operation is performed, could the current rewritten value be saved by the backup operation.

CHAPTER 7 GRINDING WHEEL DRESSING

During grinding, due to the passivation, the line of grinding wheel is not straight, unbalance and uneven wearing of grinding wheel, it frequently causes the frequent defect, such as the out-of-error, the burning, the feeding trace, the corrugation in the workpiece surface. Therefore, the grinding wheel should be dressed. It may adopt the grinding wheel dressing function. During the dressing, keep grinding wheel movement stable, otherwise, small concavo-convex holes on the grinding wheel surface affect the grinding quality. The program of automatic dressing grinding wheel is made according to the requirement of grinding machine manufacturer.

7.1 Overview of grinding wheel dressing

During grinding wheel dressing, firstly, move the dressing base of square grinding wheel on the worktable under the grinding wheel. Then, control the transverse come-and-return movement of grinding wheel; and wipe off the surface of column by layers, which are shown in figure 7-3. The following is the relative parameter of grinding wheel dressing.

- The surface velocity of grinding wheel: the linear velocity of grinding wheel, unit: m/min;

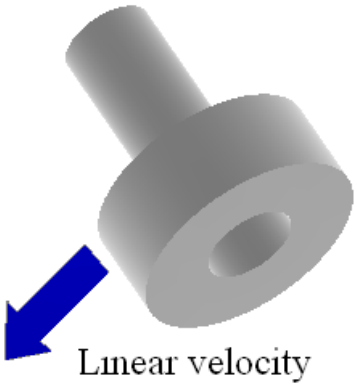

Fig. 7-1 Grinding wheel linear velocity

- The diameter D of grinding wheel: the diameter of grinding wheel, unit: mm;
- The width of grinding wheel W: the fore-and-end distance of face, unit: mm.

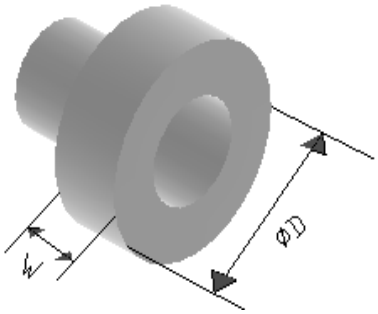

Fig. 7-2 Diameter and width of grinding wheel

- Transverse travel Zs: the dressing travel of come-and-return movement in Z axis, unit: mm.

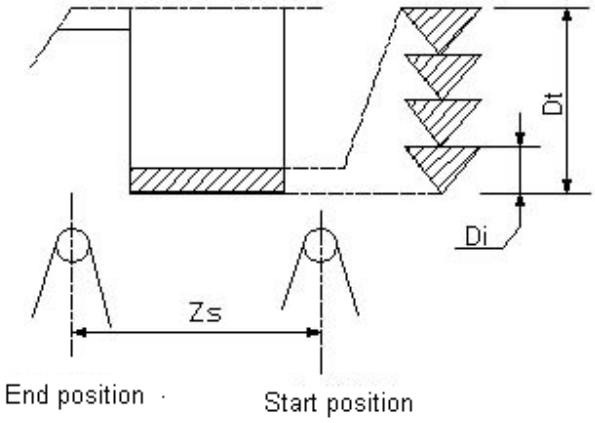

Fig. 7-3 Z axis stroke (transverse stroke)

- Dressing process parameter:

Dressing total amount Dt: Total amount of X axis feeding, unit: mm.

Dressing increasing amount Di: The amount of X axis feeding in each time, unit: mm;

Dressing speed Fd: The feedrate of Z axis, unit: mm/min.

7.2 Dressing point return

For convenient operation of user, it provides the function of grinding wheel returning to the dressing point manually and automatically. The operations are as below:

(1) Set the dressing point: Shift the axis (usually X axis) which the grinding wheel sits at to the corresponding position of grinding machine, press X 0, then the screen prompts *Set reference position of X axis?* Press ENTER to specify; then the system automatically records the current position on the machine which grinding wheel axis is located at. And it doesn't require setting again after switching on or resetting. However, it needs to set again after mechanical adjustment or re-installation of grinding wheel.

(2) When it requires dressing the grinding wheel, please press DRESS POINT, and the grinding wheel axis returns to the setting machine position automatically, waiting for dressing operation.

(3) During executing the automatic dressing program, it may also use G27 to return to the X axis' dressing point for automatic adjustment.

7.3 Manual dressing

In manual dressing, it can install the dresser with the square pointer at any position of machine worktable, and the dressing can be done through MPG.

The operation is as below:

(1) Install the grinding wheel dresser on the machine worktable;

(2) Move the worktable transverse left or right unit the square pointer reaches the position of

dressing, the maximum diameter of grinding wheel.

(3) Select the proper rotate speed of grinding wheel spindle and start the motor of grinding wheel.

(4) Press Z MPG, move the grinding wheel to the area of square pointer in MPG mode.

(5) Press X MPG, move the grinding wheel to the square pointer until the maximum diameter of grinding wheel touches the square pointer slightly.

(6) Feed dressing increasing amount Di in X axis direction.

(7) Press Z MPG to make the grinding wheel feed transversely for some distance Zs to complete one round dressing.

(8) Repeat the steps of (6) and (7), until finishing the dressing total amount Dt of X axis, then the process of dressing completes.

(9) Press X MPG, the grinding wheel is lifted along +X direction.

(10) Stop the grinding wheel motor, and then the grinding wheel dressing is over.

7.4 Automatic dressing

The system defaults that 99% of the machining program is automatic dressing. After installing the new grinding wheel, the dressing point of grinding wheel should be set. In the mode of dressing, the grinding wheel moves to the corresponding position. Press ENTER, the screen prompts *Set X reference position?* Press X 0 the screen prompts *Confirm?*

Then, press INPUT and confirm, the system automatically records the current position of grinding wheel on the machine. If the grinding wheel needs to be dressed in future, as long as press DRESS POINT, then the grinding wheel can return to the current position and execute the dressing program.

In the grinding wheel dressing mode, the dressing program area is displayed as 99% automatic dressing program which can be executed in single block and the screen prompts *Auto dress?* Press start-up key if the automatic dressing needs to be executed. Press ESC to exit program selection if the automatic dressing doesn't require.

REMARK

Generally, the grinding wheel automatic dressing programs are different according to the structure of machine and usage requirement, and it is written by machine manufacturer or the user. If the customer requires the program based on your own requirement, please contact GSK.

CHAPTER 8 SYSTEM DIAGNOSIS and SOFTWARE PLC

8.1 System diagnosis

CNC system has self-diagnosis function and it can prompt the input and output interface external signal status and spindle speed for the user to learn the status of system and quickly diagnose the malfunction of the machine.

Press working mode selection key 

, to enter the diagnosis mode. The diagnosis mode is shown in figure 8-1:

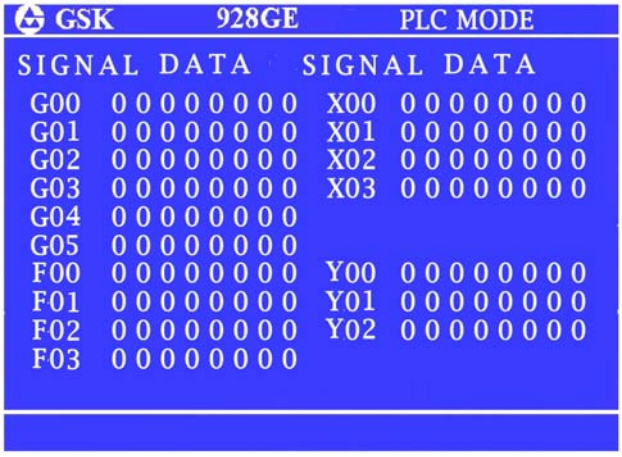

Fig. 8-1 Interface of diagnosis mode

On the diagnosis interface, it is displayed the real time information of all signals which include the signals of X，Y, G, F, R, C and T during PLC running.

Though  or  , it can pages and switch pages of each signal.

8.1.1 Introduction of diagnosis PLC input signals

8.1.1.1 Introduction of X signal (machine→PLC signal)

There are total four bytes and 32 channels for inputting X signal from X0.0 to X3.7, and they are distributed at the interface of input and servo drive. The drive alarm signal is ALM.

X0 signal：

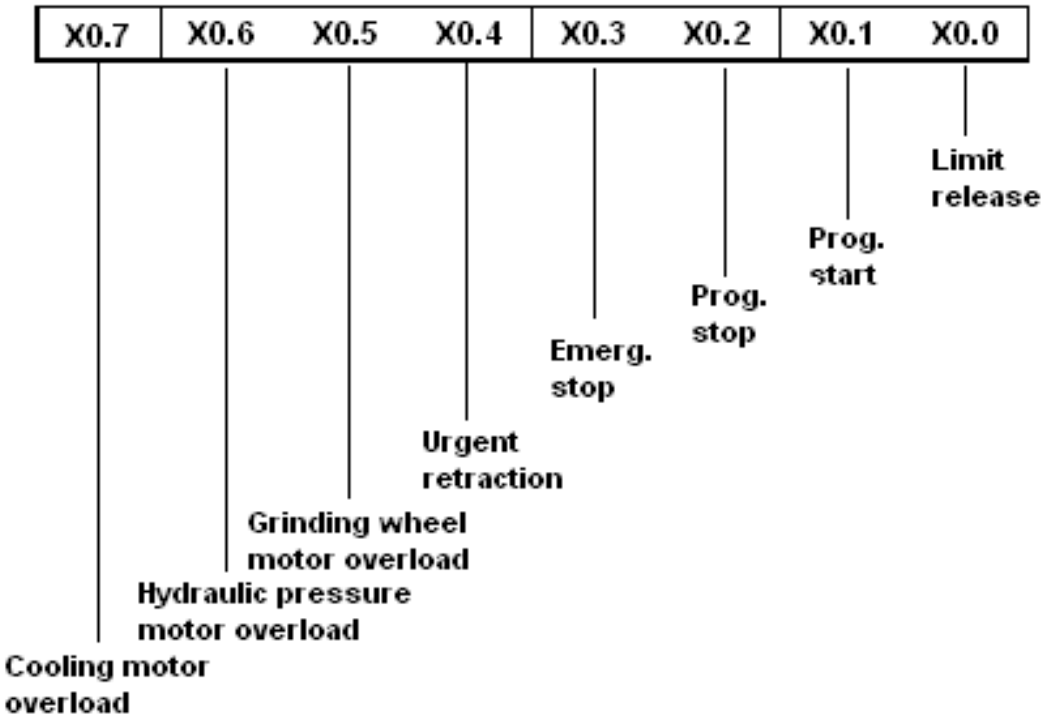

X1 signal：

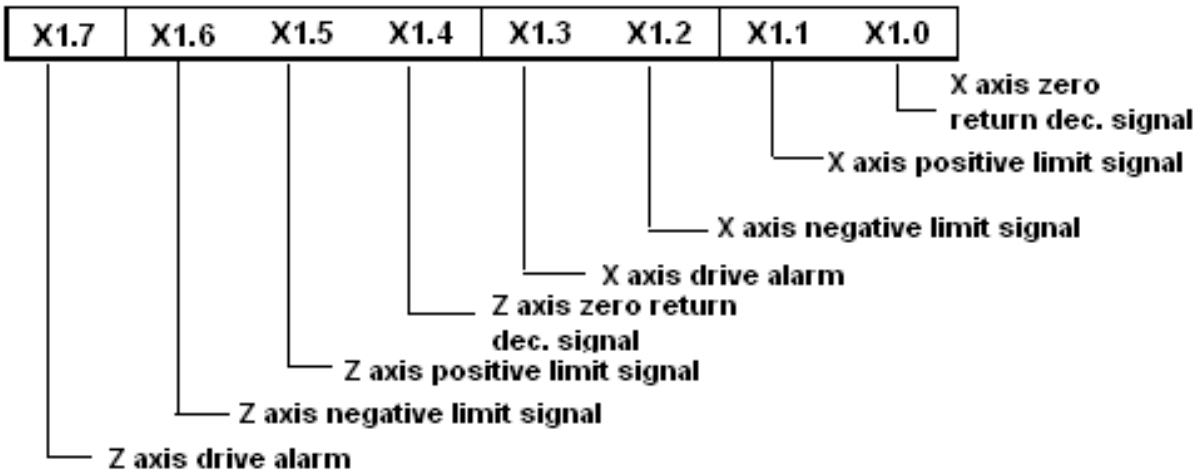

X2 signal：

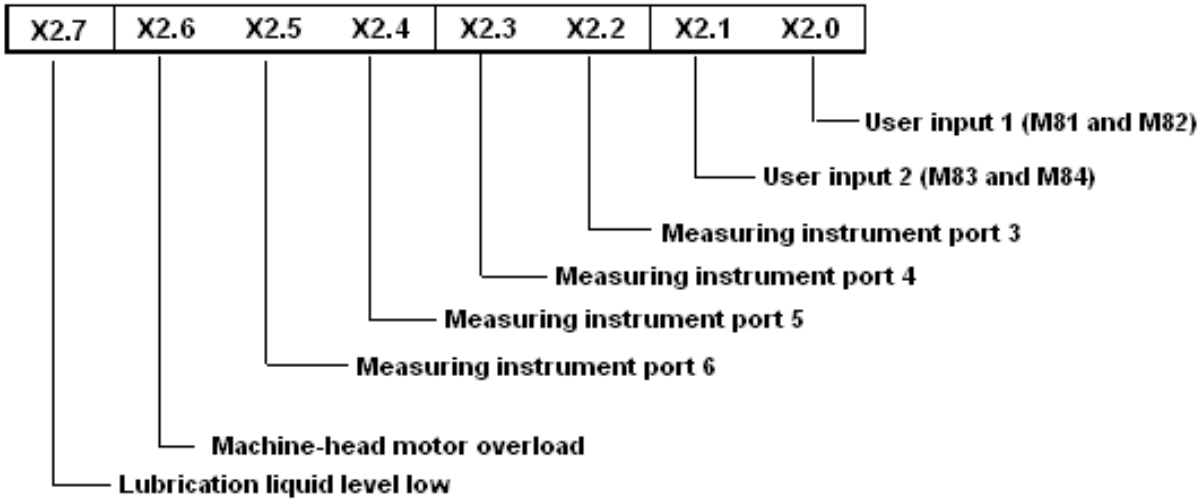

X3 signal：

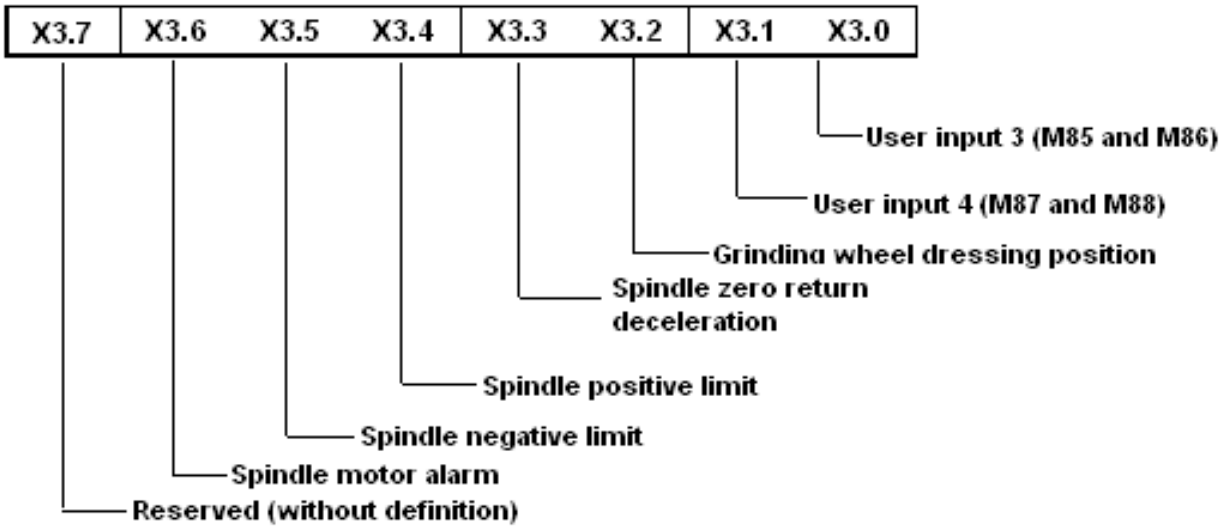

8.1.1.2 Introduction of G signals (PLC→NC signal)

G signal of PLC from G0.0 to G3.7,there are 32 singals corresponding to X signals which are the machine input signal and it is in charge of transmitting the machine signal and PLC process information to CNC actuator module and the actuator processes them in real time. There are total 16 G signals from G04 to G05, which are saved for users. The grinding machine manufacturer can define the signals according to the user's requirements.

G0 signal：

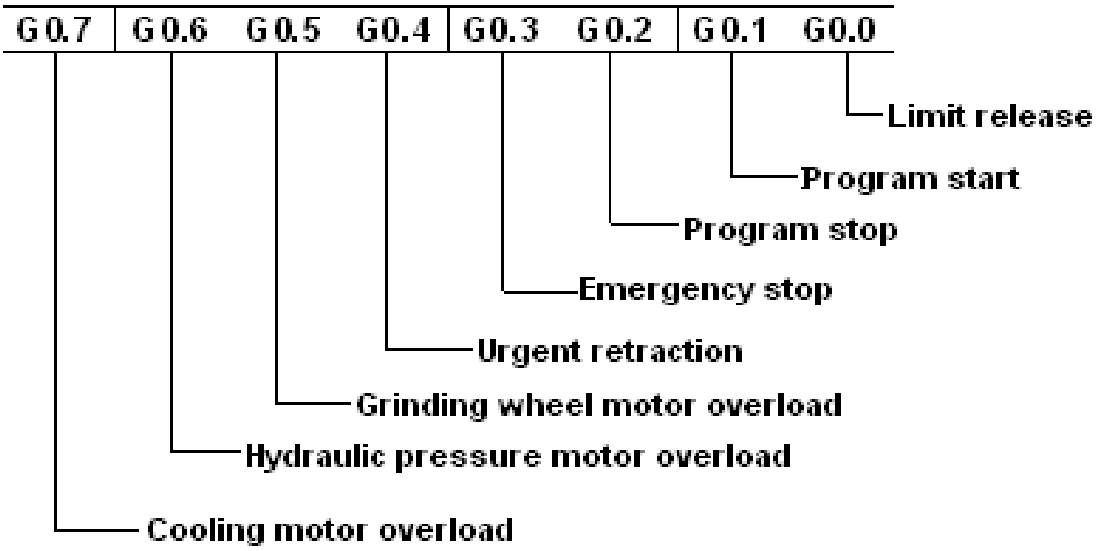

G1 signal：

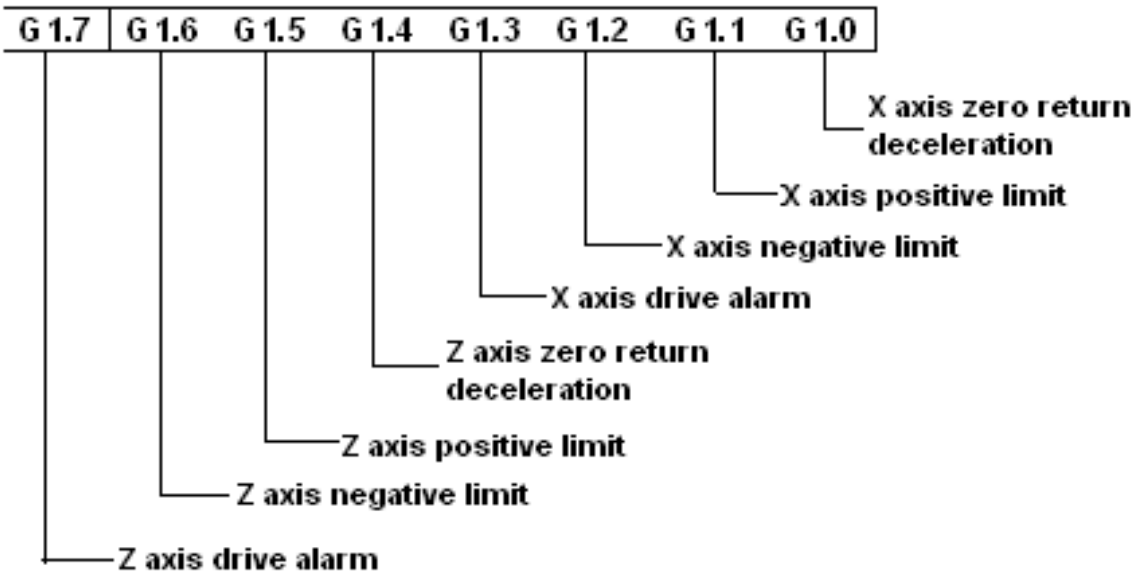

G2 signal:

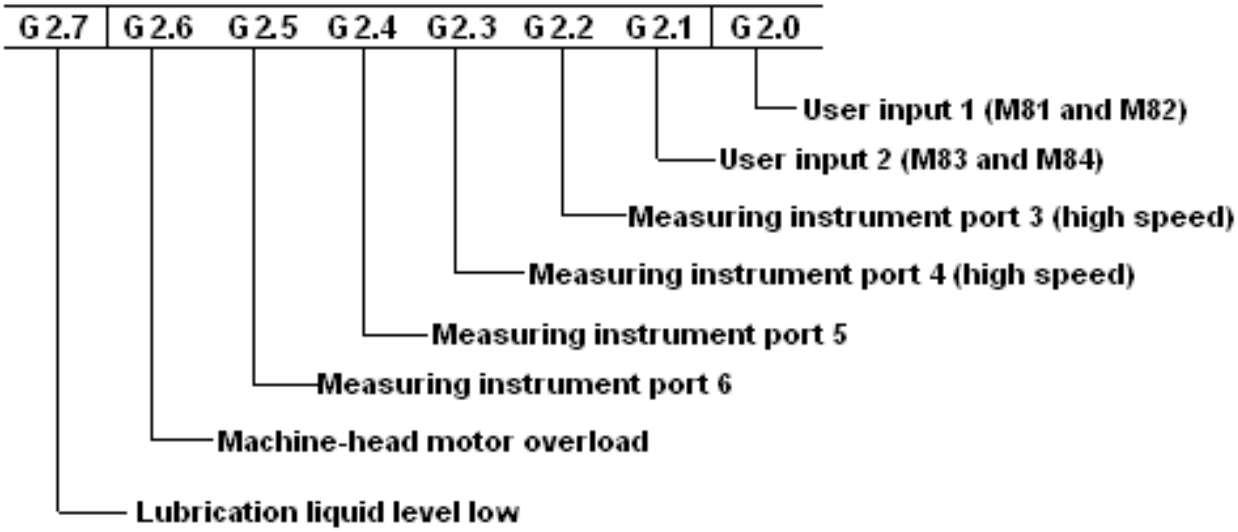

G3 signal:

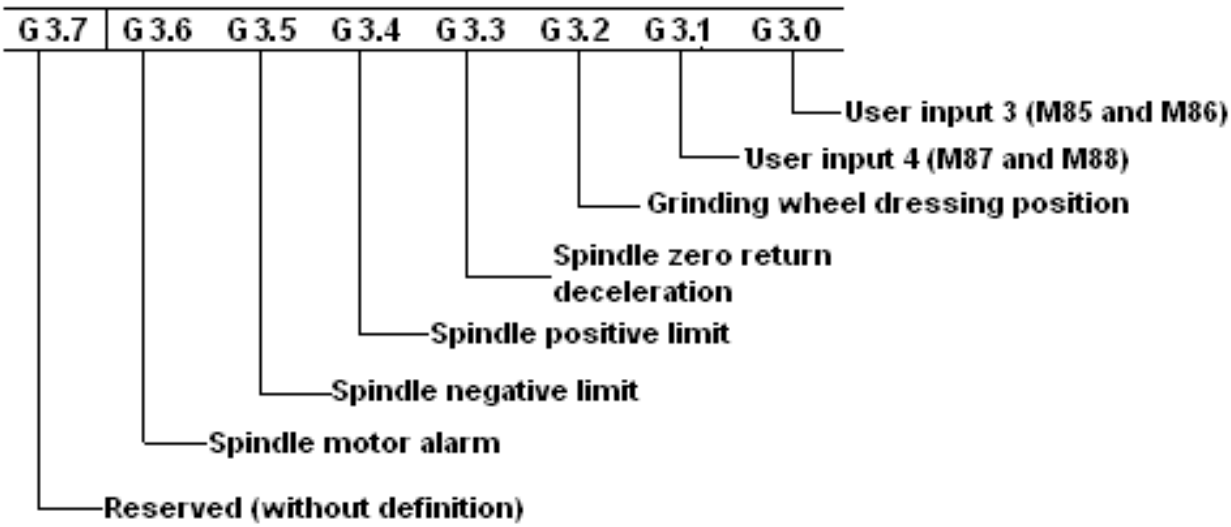

G4 ~G5: Reserved

REMARK

1. In the display of input signal diagnosis, when the optical coupling of an outer signal is on, the corresponding bit is 1.

2. The system detects the input signals in real time and displays the current status of input signals.

3. Press any key to exit the diagnosis mode and switch to other mode.

8.1.2 Introduction of diagnosis PLC output signals

8.1.2.1 Introduction of Y signals (PLC→machine signal)

There are total two bytes and 16 outputs of Y signal from X0.0 to X1.7, and they are distributed at the interfaces of output and servo drive which is driving enable and zero speed clamping.

Y0 signal:

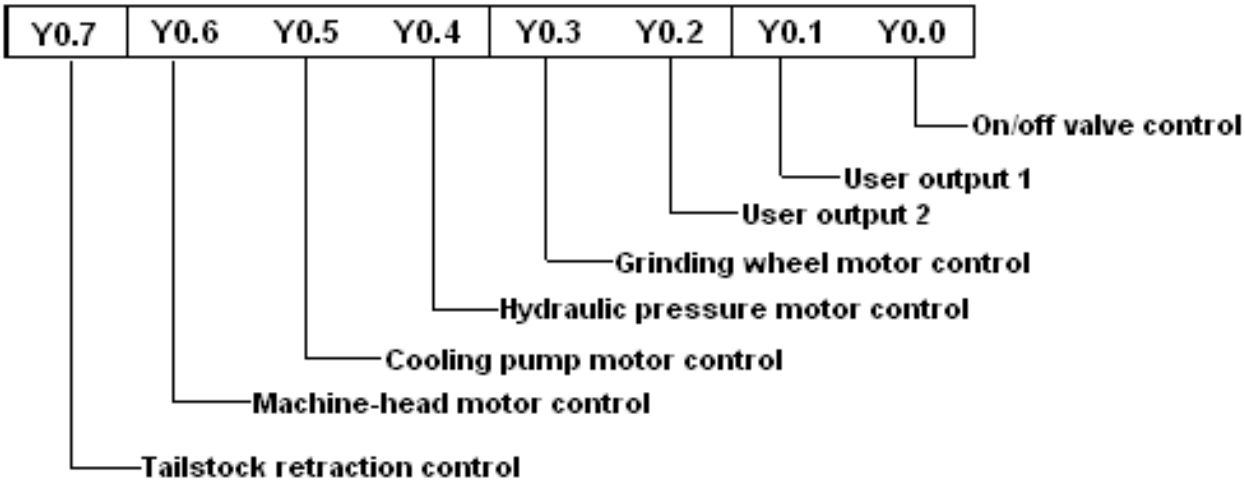

Y1 signal:

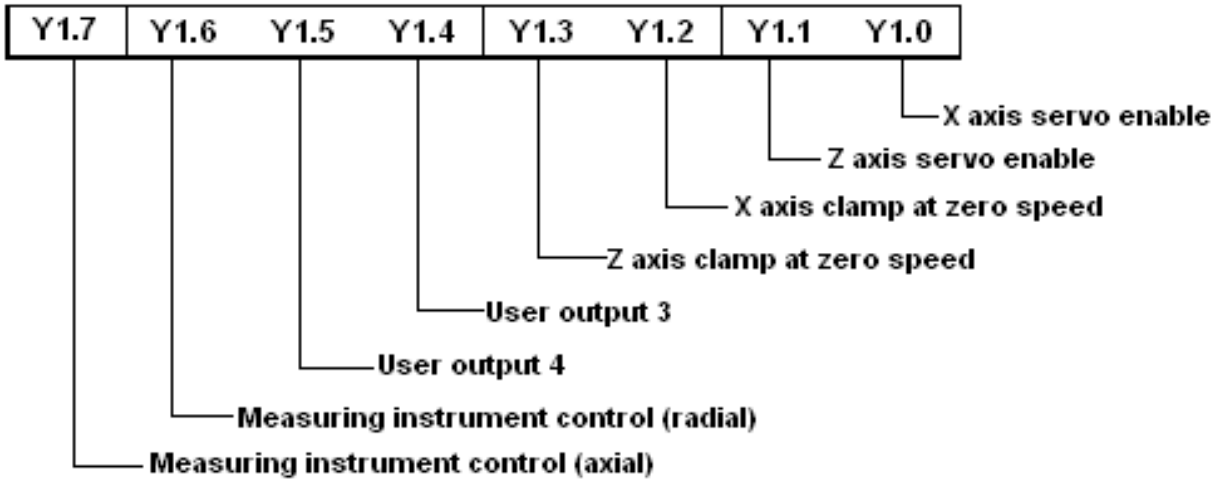

Y2 signal：

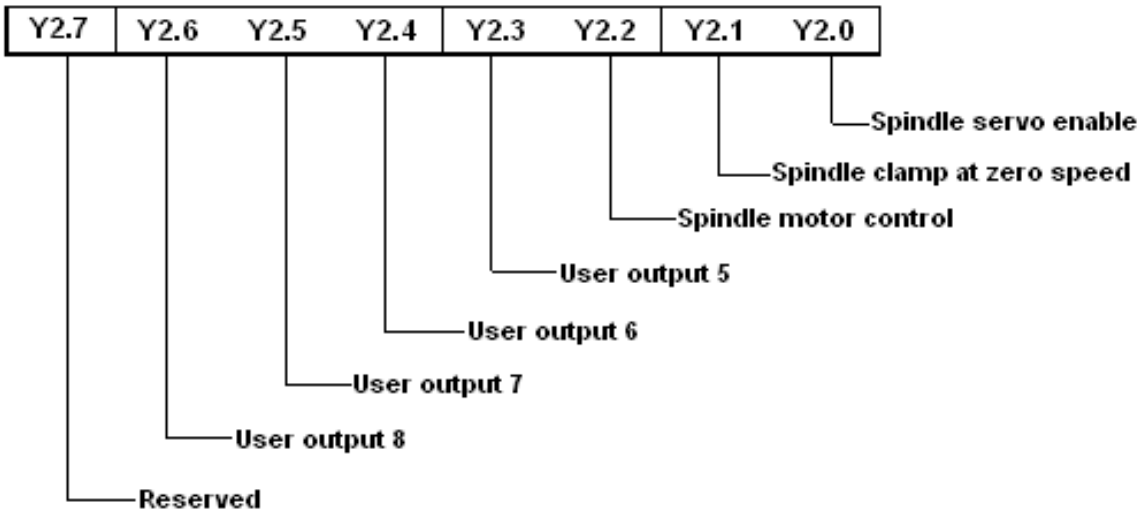

8.1.2.2 **Introduction of F signals (NC→PLC signal)**

F signals from F0.0 to F3.7 are for CNC control module communication and are responsible for the interpretation and execution of M code.

F0 signal:

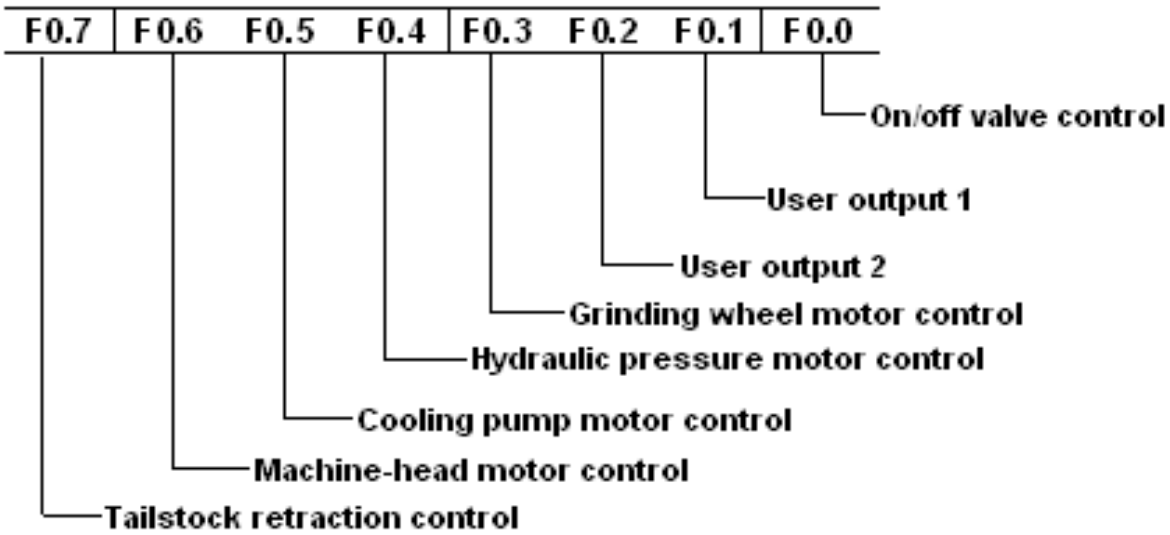

F1 signal:

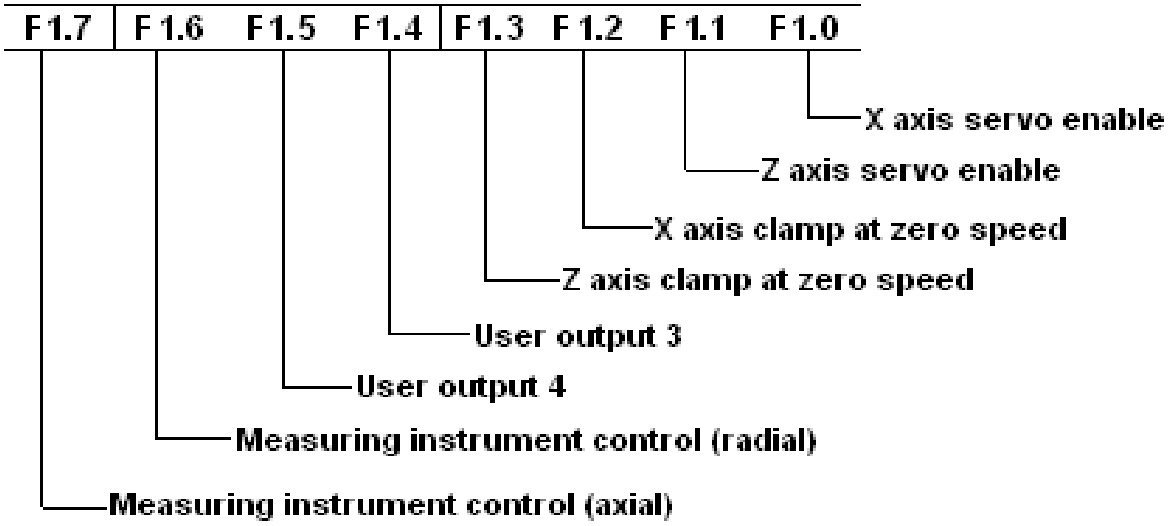

F2 signal:

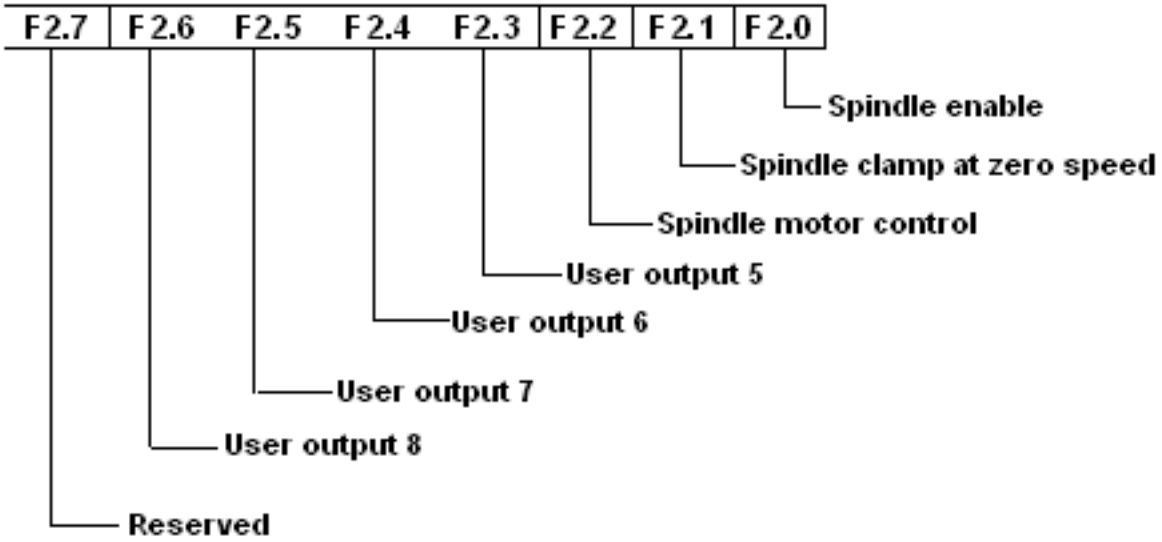

F3 signal:

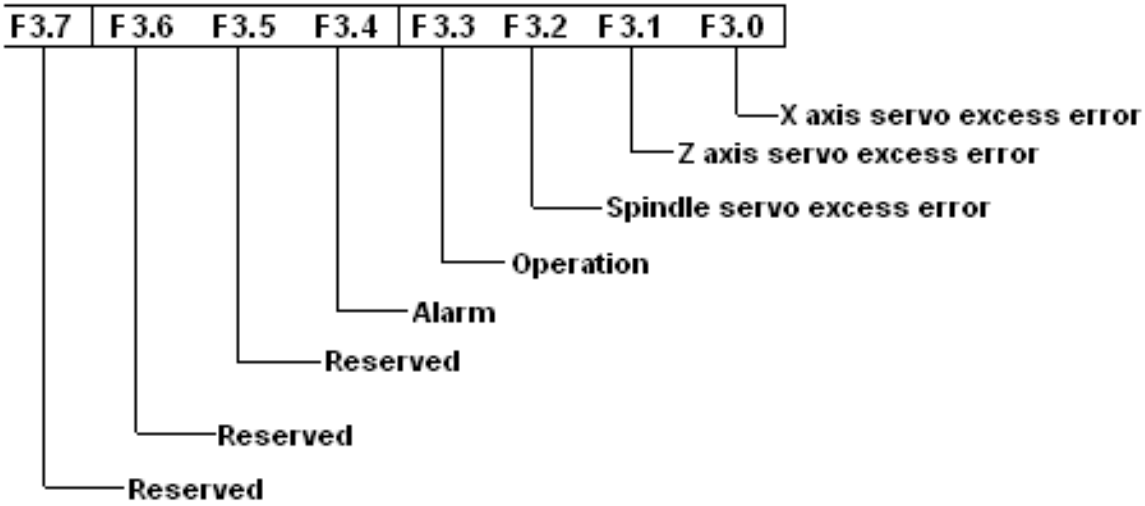

REMARK

1. If each bit in the output signal diagnosis is displayed as 1, then the corresponding bit output point optical coupling is on; If it is 0, then the output point optical coupling is off.

2. Output signal diagnosis is displayed as the current each output bit keeping status. If the signal is pulse, even the input of bit is valid; it is still displayed as 0.

3. It switches into other working modes after pressing mode selective key.

8.1.3 Other signals of system and alarm record inquiry

In the diagnosis part, the user can conveniently inquire the system input or output signal, internal relay signal, and signal of counter or timer. During the diagnosis interfaces, press or for turning the pages to inquire the signal and alarm record.

● Input and output signals

It is displayed the bit states of input signals X and G and the bit states of output signals X and F bit.

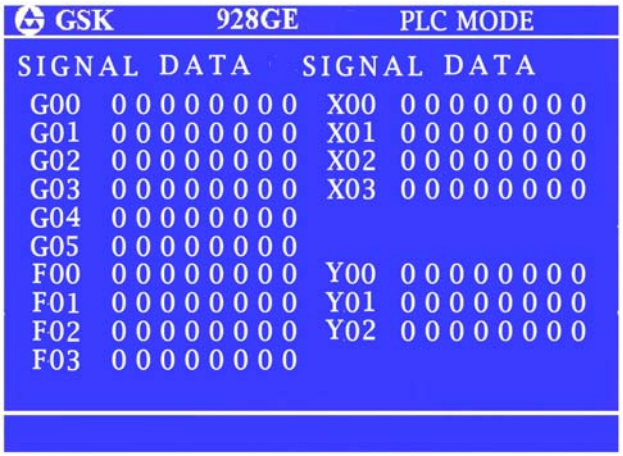

● Internal relay signal

It displays the status of 8 relays and 64 relay signals in the system.

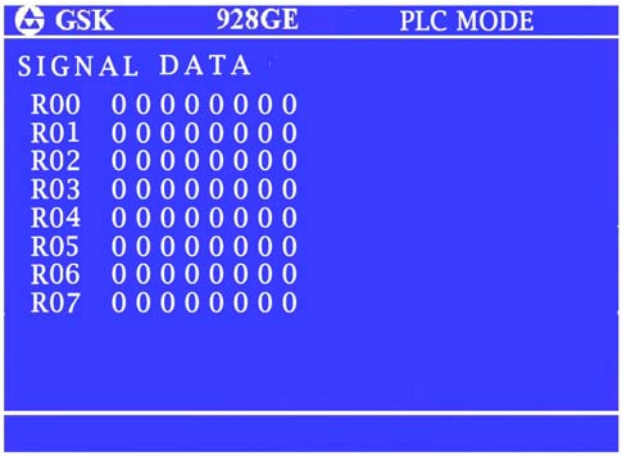

● Timer signal

It displays the status, preset value and current value of system timer from T000 to T007.

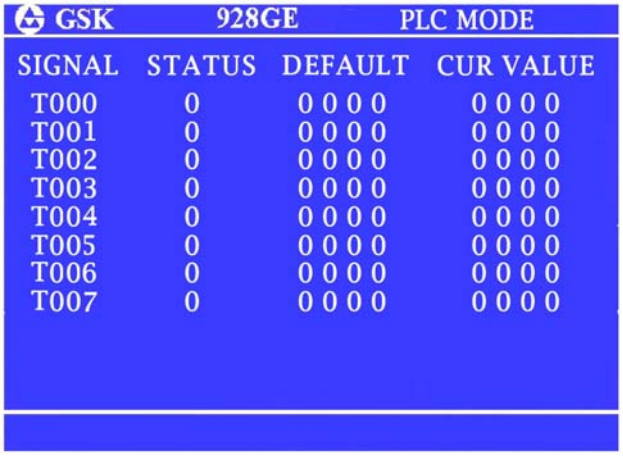

● Signal of counter

It displays the status, preset value and current values of system counter from C000 to C007.

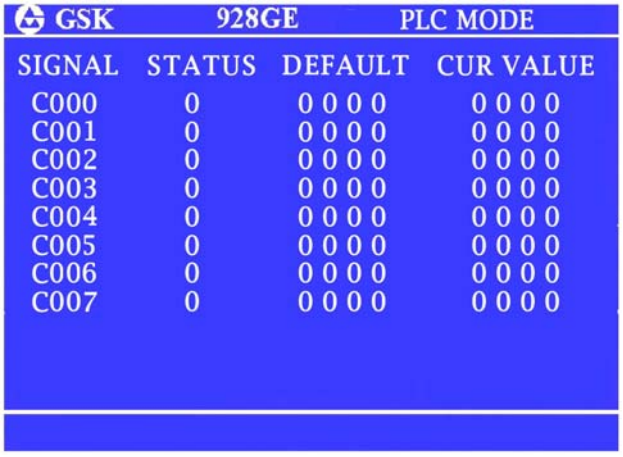

● Alarm record

It displays the latest 8 alarm records and the new alarm record replaces the most previous one.

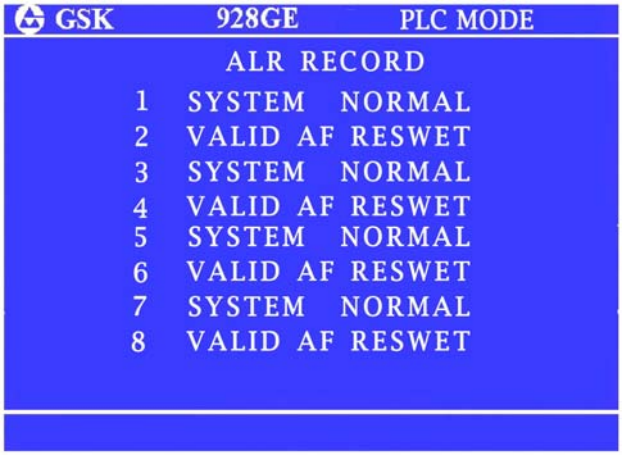

8.2 System software PLC

The system embeds PLC software for the logic control of simple machine movement.

In the diagnosis mode, if the user possesses the programming right, press ENTER and it may enter PLC programming interface. Otherwise, input the corresponding password in the parameter mode to get PLC programming right.

(1) Press PARAM to select the submenu of ***User's password.***

Press ENTER and the screen is displayed *input password*, and the password is composed of numbers which is no more than 10 digits.

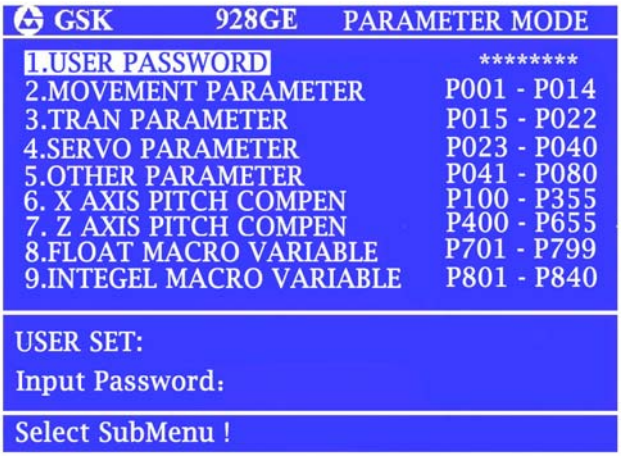

(2) After inputting the correct password, press DIAGNOSIS to return to the diagnosis menu.

Press ENTER to enter PLC edit interface.

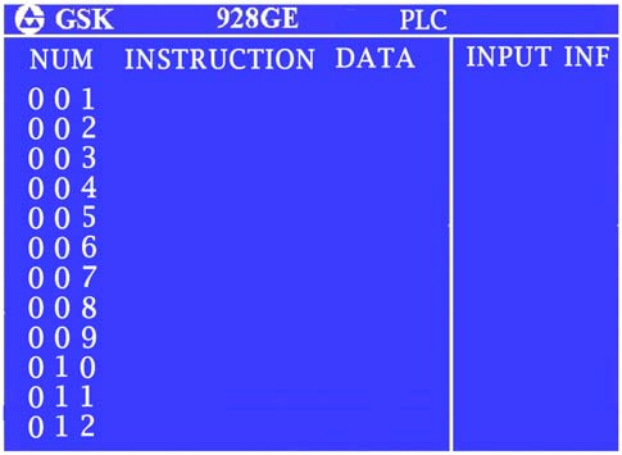

(3) Edit PLC program for the machine according to PLC edit mode. About the detailed PLC programming method, refer to Section 3 of the manual: ***GSK928GE PLC programming***.

Press ESC to exit PLC edit interface.

If PLC program editing is correct, the screen is prompted: *PLC is valid after restart!*

After the system is restarted, PLC rewritten program is valid.

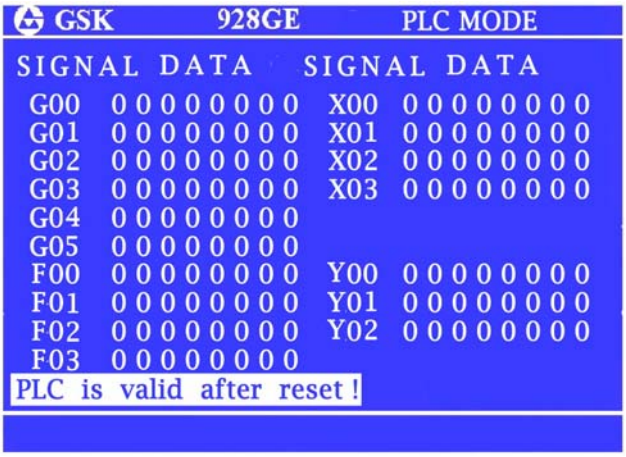

If PLC program editing is incorrect, the system analyzes the reasons and displays the corresponding fault.

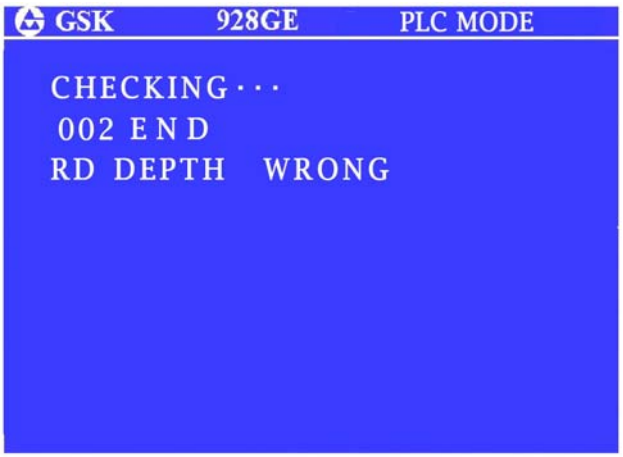

8.2.1 Initializing PLC

If the system requires a new PLC program, then a new PLC program may be created through initialization. The initialization steps of PLC program are as below:

(1) Possess the right to rewriting and controlling the program.

(2) Input password, press ENTER to return to the diagnosis menu.

Press DELETE to initialize PLC program.

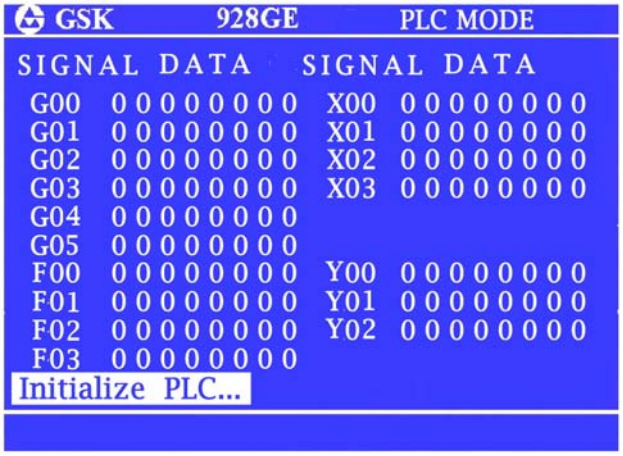

(3) If press DELETE and hold for over three seconds, PLC program is initialized.

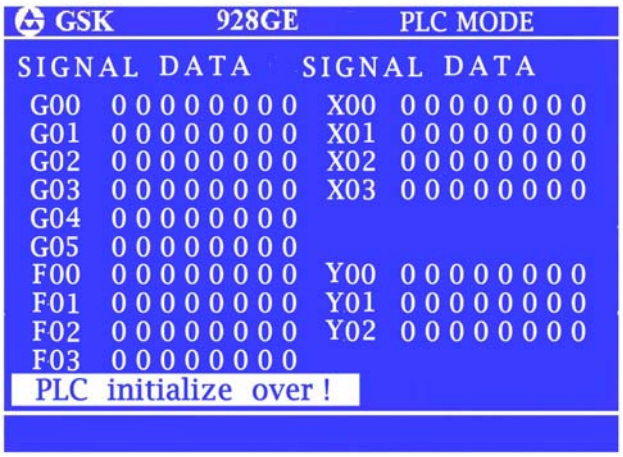

(4) If press DELETE and hold for less than three seconds, the screen prompts *User cancels PLC initialization!*

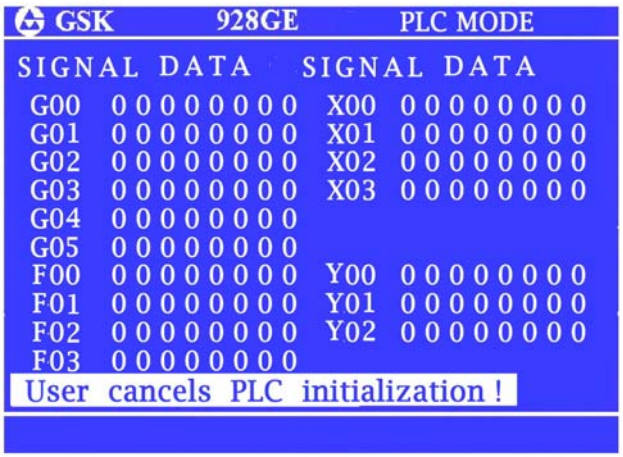

8.2.2 PLC programming

PLC programming interface is divided into four bars: line number bar, command bar, address bar and information input bar. The line number bar is for showing the position of command, only for marking and searching conveniently and searching the command easily. The command bar is for displaying PLC command, and corresponds to PLC logic relations. And the address bar is for displaying the input I/O address and corresponds to the input or output channels. Information input bar is for displaying the command and address to be input. Regarding to the programming methods, refer to the manual**----*GSK 928GE PLC programming*.**

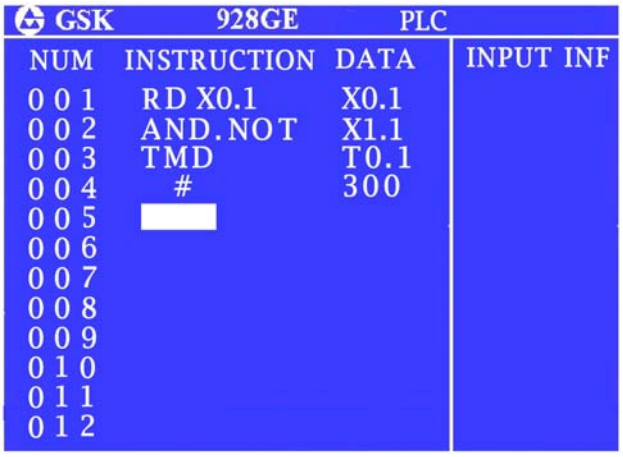

8.3 Detecting the system keyboard

928GE grinding machine CNC system provides the keypad user-defined detecting function and the user can detect whether the key is valid or not. The detection function: it can enter the diagnosis interface, press to page up and enter the detection interface which is shown in the following figure:

After entering the interface, it must detect keys' function. After completing the testing, the screen prompts *Keyboard testing completes!* And then automatic switch to manual interface, otherwise, press resetting key.

If there are status indicators, it is on during testing.

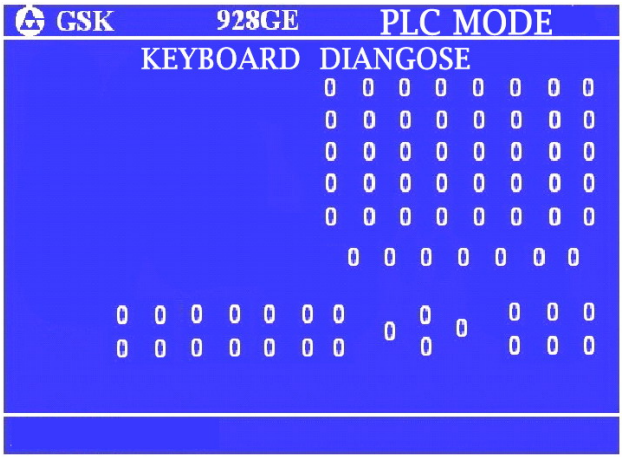
GSK 928GE PLC MODE
KEYBOARD DIANGOSE

CHAPTER 9 ADDITIONAL AXIS CONTROL FUNCTION

The spindle sets the function of cutting during the machining of machine, which is called as the first spindle. The spindle is called as the chief cutting axis in the machine data. According to the specification, the chief cutting axis is equivalent to the first spindle. In the grinding machine, the first spindle is defined as the grinding wheel axis and it is called as the grinding wheel spindle in the manual.

928G grinding machine CNC system provides the control function of the second spindle. It abbreviates as the servo spindle in CNC system. It mainly provides the function of servo spindle control and the third positional control axis, and the user can also modify to the rotation axis control based on the user's requirement.

To select the function of additional axis control function, change the corresponding bit value in "axis control mode" in Bit 6 and 7 in bit parameter 5. Concerning the detailed method, refer to parameter bit 5.

9.1 Spindle control

9.1.1 Spindle switch control

In bit parameter 5, BIT6 and BIT7 are 00, the system defines the output is spindle control mode, the spindle control keys RUNNING and STOP default the control function of spindle switch, manually input the corresponding M commands which are M33 and M35 in Jog mode.

9.1.2 Analog voltage control of servo spindle

When servo spindle connects system analog voltage output control, the system provides the semi-closed-loop control mode of spindle and directly specifies the speed of spindle.

The system adopts S command to control the speed of spindle. During usage, select the corresponding parameter bit of control mode, and call the corresponding parameter set by spindle. After selecting the control mode and under the parameter setting submenu, press to access the corresponding parameter setting item and input based on the actual requirements.

Command format: S OOOO

The range of OOOO is 0000~6000, the spindle analog voltage corresponding to the controlled actual speed, unit: r/min.

Command functions: Set the speed of spindle, CNC outputs –10V to 10 V analog voltage to control servo spindle for realizing the stepless speed change. S command value is not memorized when power off or resetting, S command value is 0 after switching on. While the control function of spindle speed analog voltage is valid, the actual speed of control spindle should comply with the required speed based on the spindle parameter setting value.

In Jog mode, manually input S/J, after the system is displayed S, input the required speed. Press ENTER, the spindle directly starts and runs. Press STOP, the spindle stops running, and it is valid as inputting S0.

In the automatic running, if the program running stops without the command of spindle stop, the system is still allowed to switch the working mode during the spindle running, pay attention to the relative operation.

REMARK

One block only allows one S command in it. The data after the address S directly specifies the actual speed of spindle. Execute the starting function of spindle during the first time running, and switch on the running button of spindle. When movement command and S code are in the same block, firstly accelerate spindle to the specified speed, and then execute the position movement command.

The spindle uses the servo semi-closed-loop control mode. Under the normal situation, if the spindle switches from high speed to low speed or still status, or abruptly accelerate to the almost maximum speed of motor, or the timing range of motor changes too much instantly, the readjustment is occurred in the motor, which is like the inertia, and it can be adjusted through adjusting the servo parameter of spindle. About the adjustment method, refer to the parameter adjustment as below.

9.1.3 Spindle trial running speed

When spindle control receives the system analog voltage output, and meanwhile control output is valid, which is controlled by switch (normally, control CW, CCW or enable signals. The system also provides an output setting at trial running speed, refer to parameter P059. And output a setting speed during output the switch; it does not require output at the setting speed during output spindle control status, set P059 as 0.

REMARK

In the specified situation, the system additional axis control can also connect transducer and motor for relative control, and its CW and CCW signals can be realized through RUNNING and STOP.

9.2 Position axis control

When BIT6 and BIT 7 in bit parameter 5 are 10, the additional spindle of GSK928GE can be extended to the third position control axis. After setting the parameter, the coordinate system is shown in the following figure:

C represents the third position axis coordinate, and other relative definitions are same as that of X and Z axes.

9.2.1 Manual operating additional position axes

Except MPG control mode, the operations of additional axis which includes feedrate override, rapid override and manual single step operation etc. are same as that of X and Z axes. These operations are valid only after specifying that the operational mode is position axis control mode.

Machine zero return: The machine zero return control button of additional axis C is compound key.

In Jog mode, press [MACHINE ZERO] and the screen is displayed *Z back to zero?*

And pressing [MACHINE ZERO] again, the screen is displayed: *Spindle back to zero?* Such display is in cycle.

Then press [ENTER] , the corresponding axis returns to the zero point of machine at the set feedrate in the parameter.

About the method and process of mechanical resetting refer to 6.1.5.1.

Set the coordinate system: In Jog mode, press [INPUT] and the screen is displayed *set:* then select the axis which should be set to zero; in the additional axis, it requires pressing C key and the screen is displayed *set: C*, and then input the value of coordinate system. Press [ENTER] and the screen displays *input or not* and press [ENTER] again to confirm.

Manual operation: The axis is additional axis which is lack of independent key for the movement along the positive and negative directions. Therefore, the system uses two spindle control key for the movement operation of +C and －C axes. [STOP] is represented positive operation and [RUNNING] negative operation.

9.2.2 Programming method of additional position axes

As for the position axis control, when the system begins linear interpolation, the programming and command format of C axis is same as that of the other two axes. Moreover, the system only allows the function of circular interpolation between X and Z axes. And the system does not provide C axis address for circular interpolation function with the other axes, or sharing the block with G02 and G03 commands.

The command format of rapid positioning G00: G00 X_ Z_ C_

The command format of liner interpolation G01: G01 X_ Z_ C_ F_

9.3 Rotation axis control

928GE CNC system of grinding machine provides not only the output function of servo spindle, but also the axis-defined angle rotating function. The input command value is the absolute displacement value of axis corresponding angle.

When BIT 6 and BIT 7 of the bit parameter 5 is 01, it is rotation axis control mode. The interface of switching coordinate is shown in the following figure:

Then C represents the rotation axis and C program coordinate means the rotating angle, and its range is from –360.00~360.00. (Unit: degree)

Command format:

The programming and command format of rotation axis are same as that of additional position axis:

C 0000.

And the range of 0000 is from –80000.000 to 80000.000. And the unit of spindle rotating angel is degree.

Command function: Set the rotating angle of spindle. Take the current position of spindle as reference and rotates it to the angle set by the user.

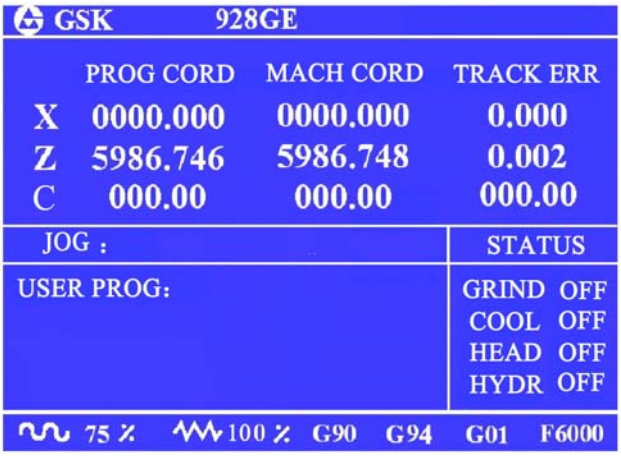

REMARK

The programming and command mode of rotation axis is same as that of the linear axis. The only difference is that the data which is behind the linear axis address represents the linear position, but the data which is behind the rotation axis means the rotating angle.

Note the status of G90 and G91 during operation since the absolute programming and relative programming of rotation axis are same as those of linear axis.

The system automatically calculates the angle range of rotation. If it exceeds the setting limit, it is displayed the alarm message: *Spindle positive limit* or *spindle negative limit*.

The actual speed of rotation axis can be calculated as below: It defaults that the screw pitch is 10, gear ratio 1:1. And the user can adjust the gear ratio.

9.4 Setting relative parameters of the second spindle

The second spindle control mode is abbreviated for spindle in the system. In this control mode, after Bit 3 in bit parameter 3 is set as 1, press , the following set interface prompts:

The following relative parameters of the corresponding axis control modes are classified. About the setting of the parameter, refer to the Chapter 6th in this part.

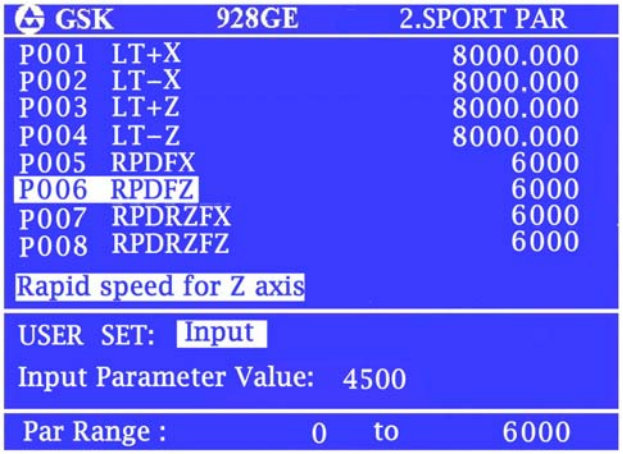

The setting of BIT 7 and BIT 6 in the bit parameter 5 represents the control mode of the second spindle:

The value of BIT 7 and BIT 6 in bit parameter 5	0 0	0 1	1 0	1 1
Corresponding control mode	Servo spindle	Additional position axis	Rotation axis	
P059 spindle trial running speed	△			
P060 spindle grid		△	△	
P061 spindle sensitivity	△	△	△	
P062 spindle pulses	△	△	△	
P063 spindle positive limit		Optional	Optional	
P064 spindle negative limit		Optional	Optional	
P065 spindle rapid speed		△	△	
P066 spindle zero return rapidly		△	△	
P067 spindle zero return at low speed		△	△	
P068 acceleration time of spindle rapid		△	△	
P069 acceleration time of spindle cutting		△	△	
P070 zero offset compensation of spindle	Optional	△	△	
P071 spindle proportional coefficient	Optional	△	△	
P072 spindle integral coefficient	Optional	△	△	
P073 spindle differential coefficient		△	△	
P074 spindle saturation	Optional	△	△	

P075	Spindle speed feed forward	Optional	△	△	
P076	spindle follow errors	Optional	△	△	
P077	spindle screw pitch		△		
P078	spindle space		△	△	
P079	spindle motor gear number	Optional	△		
P080	Spindle feed screw gear number	Optional	△		

Remark: △ is the parameter which is necessary to adjust.

CHAPTER 10 DEFINITION and CONNECTION DIAGRAM of SYSTEM INTERFACE SIGNALS

10.1 Installation layout of the system

10.1.1 Installation layout of the system back cover

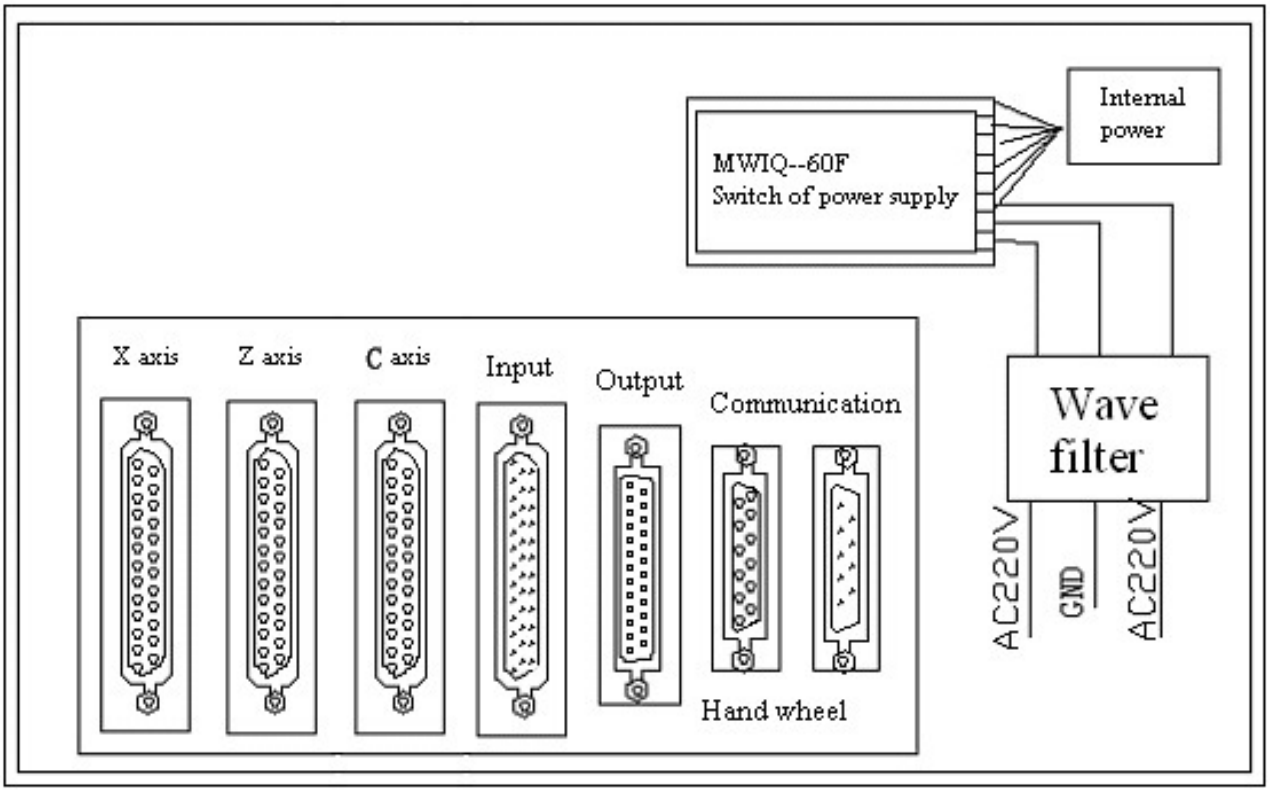

● Power supply box: It uses MWIQ-60F power supply box with

① COM1,5V adjustable; ② COM2, +24V;③+15V,COM3,-15V，and the three cords don't share the earth;

● Filter (optional): The input end is AC 220 power supply input, PE end is grounded, and the output ends connect with the end of L and N of MWIQ-60F power supply box;

● Motor 1: 25-cord, D type opening socket, connecting with X axis drive;

● Motor 2: 25-cord, D type opening socket, connecting with Z axis drive;

● Motor 3: 25-cord, D type opening socket, connecting with C axis drive;

● Input: 44-cord, D type opening socket, the interface of the system receiving the external signals of machine;

● Output: 26-cord, D type pin socket, the interface of the system sending the signals to the machine;

● MPG: 15-cord,D type opening socket, connecting with the external extended MPG; if it is 9 cords and opening socket, only the common MPG is allowed to connect;

● Communication: 9-cord, D type pin socket, connecting with the external PC.

10.1.3 Overall connection diagram

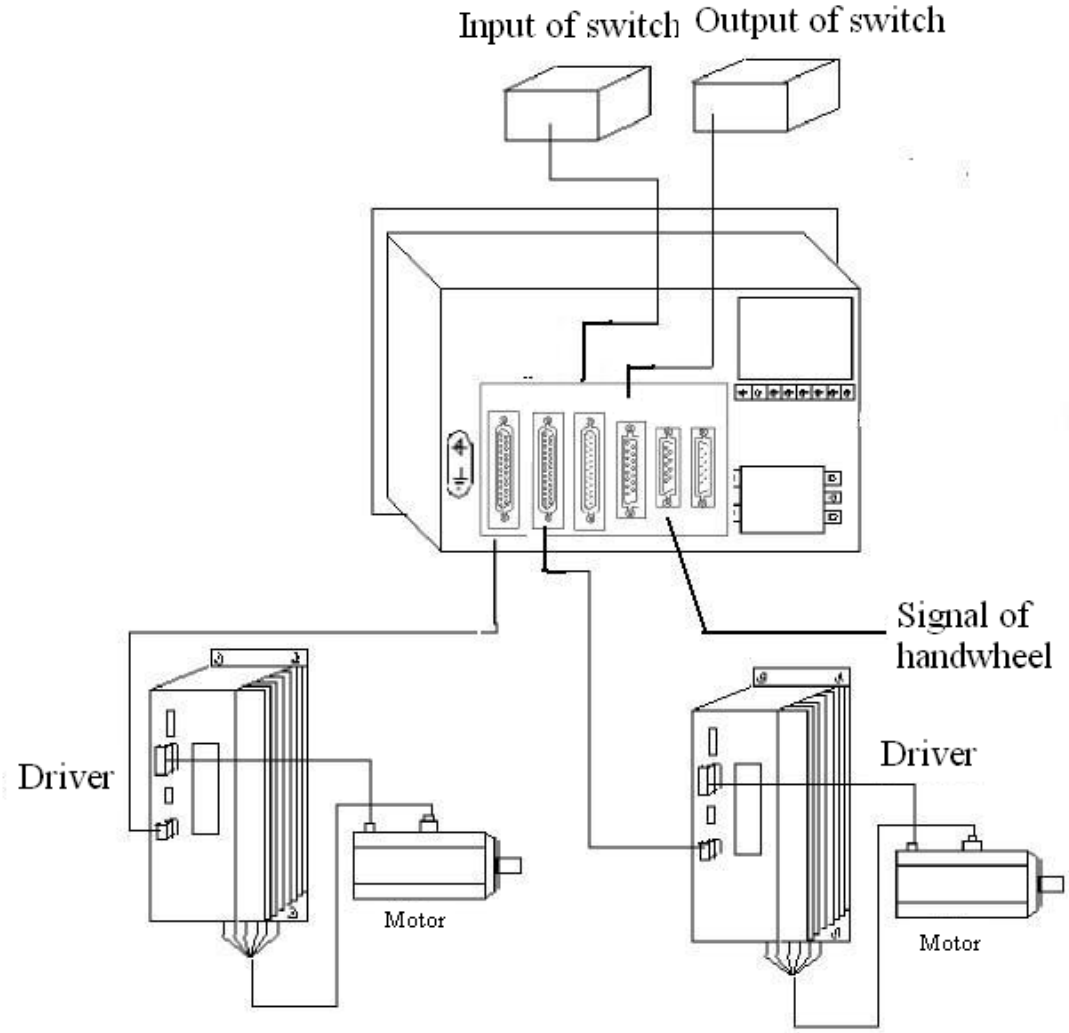

Fig. 10-2 Overall connection diagram

REMARK

The drive matching with the system should have the speed control interface of analog ±10V voltage input. At present, the following drives and motors are the options:

- Yaskawa servo drive(SGDM-15ADA) and motor (SGMGH-13ACA61)
- Maxsine drive(EP100-3A) and Huazhong motor (130ST-M04025H)
- GSK DA98B（DA98D）drive and GSK motor (130SJT-M040C)

The user can select different drive and motor for practical use. Regarding to the appearance and installation dimension, refer to the introduction of the drive and the motor.

10.2 Definition of system interfaces

10.2.1 Definition of motor drive interfaces

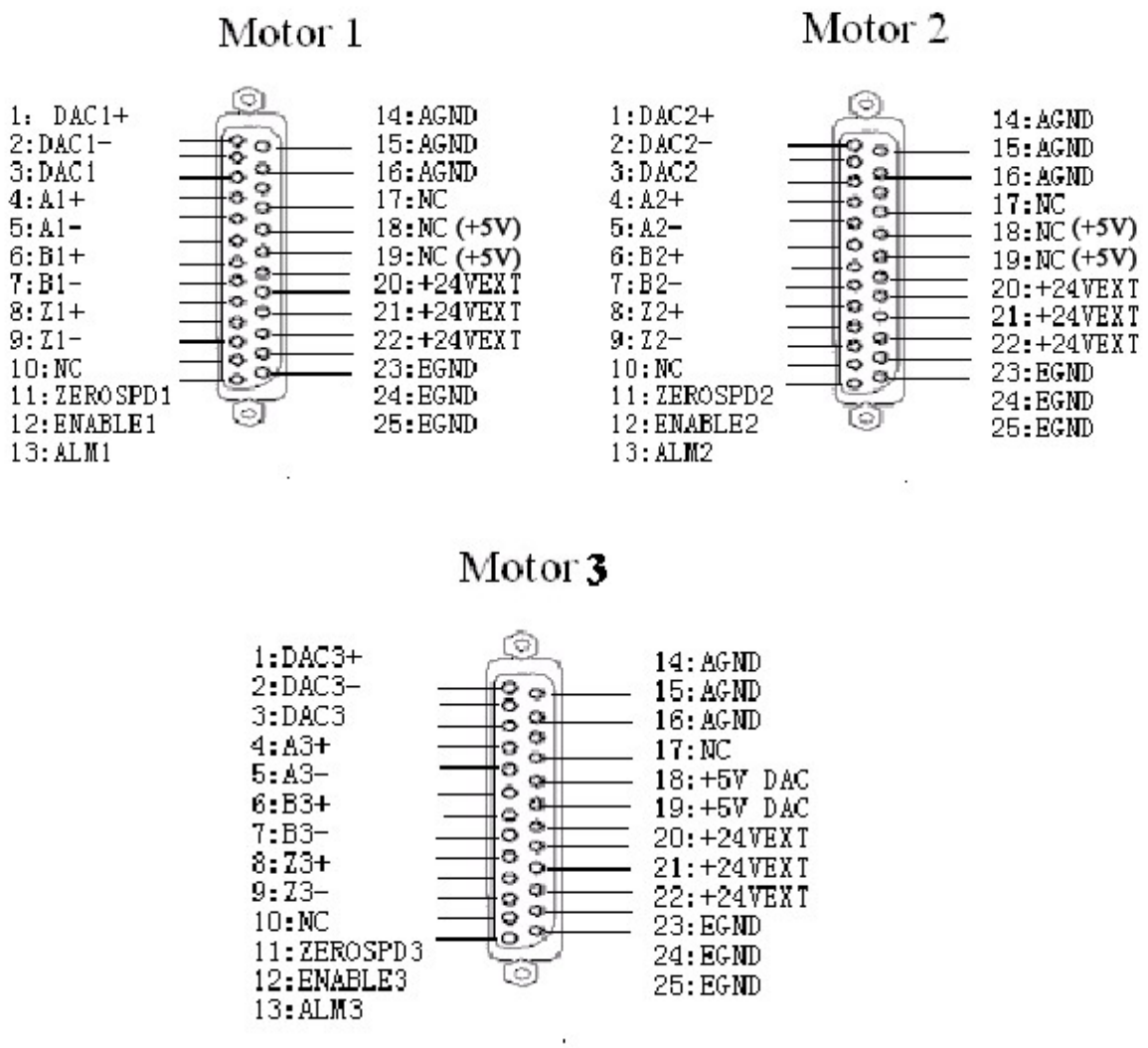

Fig. 10-3 Drive interface

TERMINAL	SIGNAL			REMARK
	MOTOR 1	MOTOR 2	MOTOR 3	
1	DAC1+	DAC2+	DAC3+	Analog voltage difference output signal DAC+
2	DAC1-	DAC2-	DAC3-	Analog voltage difference output signal DAC-
3	DAC1	DAC2	DAC3	Analog voltage single terminal output signal DAC
4	A1+	A2+	A3+	Coder A + input
5	A1-	A2-	A3-	Coder A – input
6	B1+	B2+	B3+	Coder B + input
7	B1-	B2-	B3-	Coder B – input
8	Z1+	Z2+	Z3+	Coder Z + input
9	Z1-	Z2-	Z3-	Coder Z – input
10	NC		Y2.2	Control signal of spindle switch
17	NC			Reserved port
18、19	+5V DAC			5V power supply
11	ZEROSPD1	ZEROSPD2	ZEROSPD3	Zero speed clamp signal
12	ENABLE1	ENABLE2	ENABLE3	Servo enable signal
13	ALM1	ALM2	ALM3	Alarm signal
14、15、16	AGND			Analog grounding
20、21、22	+24VEXT			24V power supply
23、24、25	EGND			Digital grounding

Remark:1）Analog AGND and digital grounding EGND are powered separately by isolation power supply, and they are not allowed to connect with each other.

2) +5V "earth wire" adopts analog AGND;

3) The feedback signal directly connects with the corresponding axis hole during connecting with the grating ruler, and the original feedback signal of drive unit should be cut off.

10.2.2 Definition of MPG interface

CNC system of GSK928GE grinding machine uses two interfaces of common and external extended-function MPG, and the definitions of interfaces are as below:

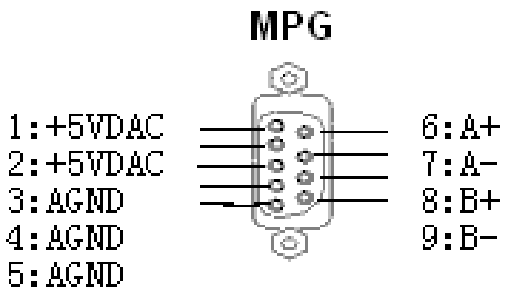

Fig. 10-4 MPG interfaces (9-pin socket)

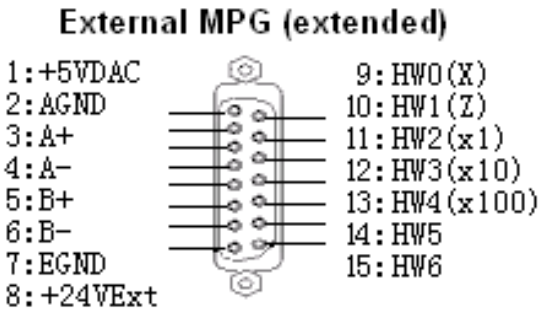

Fig. 10-5 MPG interfaces (15-pin socket)

Terminal of External MPG	Terminal of MPG	SIGNAL	REMARK
1	1、2	+5VDAC	5V analog power supply
2	3、4、5	AGND	Analog grounding
3	6	A+	MPG difference A + signal
4	7	A-	MPG difference A –signal
5	8	B+	MPG difference B+ signal
6	9	B-	MPG difference B– signal
7		DGND	DGND
8		+24VExt	+24V power supply
9		HW0	X axis
10		HW1	Z axis
11		HW2	x1 gear
12		HW3	x10 gear
13		HW4	x100 gear

10.2.3 External output interface definition

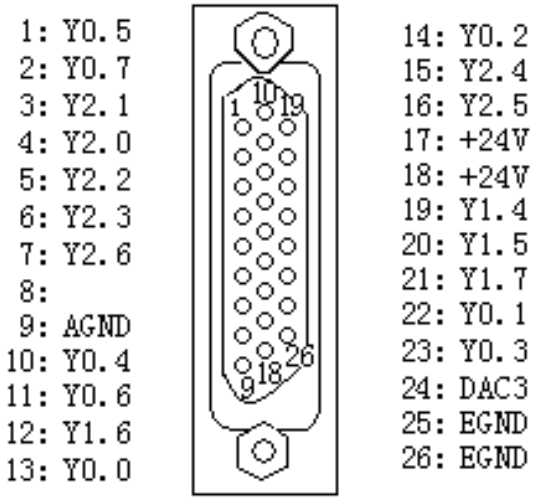

Fig. 10-6 External output interface

TERMINAL	ADDRESS	INTRODUCTION	SIGN
1	Y0.5	Cooling motor control	RAK
2	Y0.7	Tailstock retraction control	CEK
3~5	VOID		
6	Y2.3	User output 5	USEO5
7	Y2.6	User output 8	USEO8
8/9	VOID		
10	Y0.4	Hydraulic motor control	HPK
11	Y0.6	Machine-head motor control	LHK
12	Y1.6	Measuring valve 1 control	SCAK1
13	Y0.0	Valve on or off	VAK
14	Y0.2	User output 2	USEO2
15	Y2.4	User output 6	USEO6
16	Y2.5	User output 7	USEO7
17/18	+24V	24V power supply	+24V
19	Y1.4	User output 3	USEO3
20	Y1.5	User output 4	USEO4
21	Y1.7	Measuring instrument valve 2 control	SCAK2
22	Y0.1	User output 1	USEO1
23	Y0.3	Grinding wheel motor control	GWK
24	VOID		
25/26	EGND	Digital grounding	EGND

10.2.4 External input Interface definition

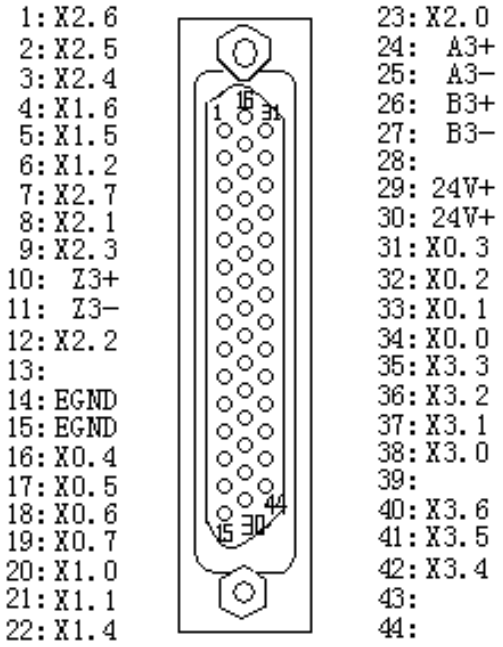

Fig. 10-7 External input interface

TERMINAL	ADDRESS	INTRODUCTION	SIGN
1	X2.6	Machine-head motor overload	LHM
2	X2.5	Measuring instrument port 6	SCARER4
3	X2.4	Measuring instrument port 5	SCARER3
4	X1.6	Z axis negative limit signal	ZLIMIT－
5	X1.5	Z axis positive limit signal	ZLIMIT+
6	X1.2	X axis negative limit signal	XLIMIT－
7	X2.7	Lubrication oil level low	LOW
8	X2.1	User input 2	US2
9	X2.3	Measuring instrument port 4	SCARER2
10~13	VOID		
14/15	EGND	Digital grounding	EGND
16	X0.4	Urgent retraction	URB
17	X0.5	Grinding wheel motor overload	GWM
18	X0.6	Hydraulic motor overload	HPM
19	X0.7	Cooling motor overload	RM
20	X1.0	X axis zero return deceleration signal	XH
21	X1.1	X axis positive direction limit signal	XLIMIT+
22	X1.4	Z axis zero return deceleration signal	ZH
23	X2.0	User input 1	US1
24~28	VOID		
29/30	24V	+24V power supply	+24V
31	X0.3		ESP

32	X0.2	Program stop	PSP
33	X0.1	Program start	PST
34	X0.0	Limit unlock	ULK
35	X3.3	Spindle zero return deceleration signal	PAH
36	X3.2	Grinding wheel dressing position	GWFP
37	X3.1	User input 4	US4
38	X3.0	User input 3	US3
39	VOID		
40	X2.2	Measuring instrument port 3	SCARER1
41	X3.5	Spindle negative direction limit signal	PALIMIT－
42	X3.4	Spindle positive direction limit signal	PALIMIT+
43/44	VOID		

10.2.5 Definition of communication interface

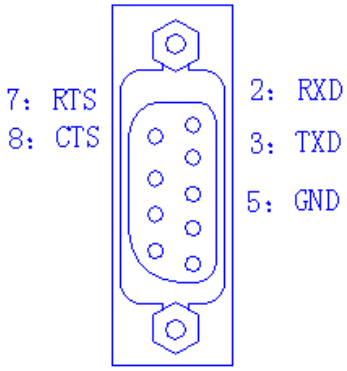

Fig. 10-8 Communication interface

Terminal	Signal	Remark
1	Null	
2	RXD	Receive the data
3	TXD	Transmit the data
4	Null	
5	GND	Signal grounding
6	Null	
7	RTS	Unused
8	CTS	Unused
9	Null	

10.3 System connection diagram

10.3.1 Motor drive unit connection diagram

1. Maxsino drive unit connection diagram

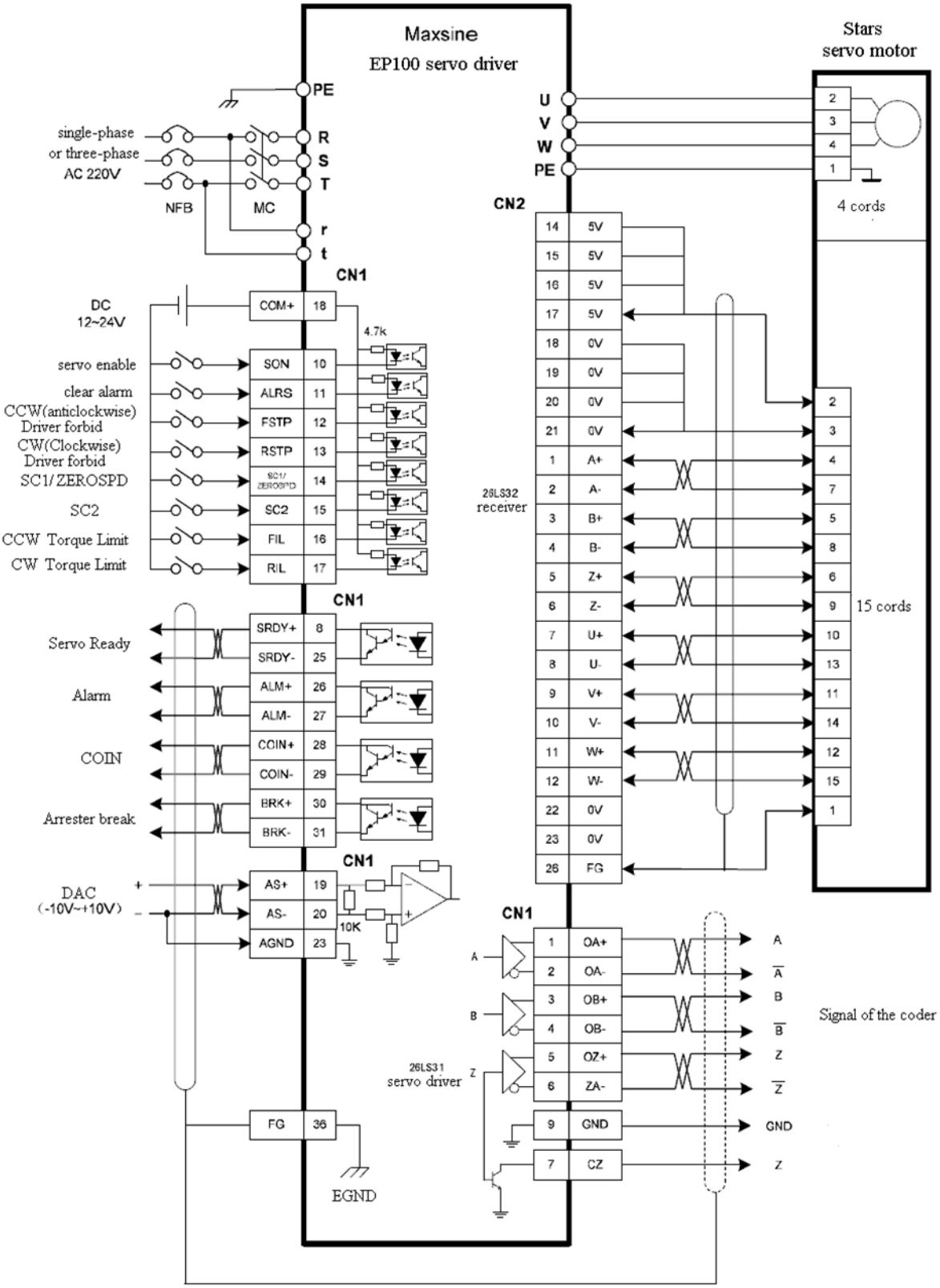

Fig. 10-9 Connection diagram of Maxsino drive unit speed control mode

Table 10-1 GSK928GE corresponding and connection with the Maxsino drive

NAME OF SIGNAL	PIN NUMBER OF MAXSINO DRIVE	GSK928GE SERVO SIGNAL INTERFACE
A+	1	4
A-	2	5
B+	3	6
B-	4	7
Z+	5	8
Z-	6	9
DAC	19	3
AGND	20，23	14,15,16
+24V	18	20,21,22
ENABLE	10	12
ZEROSPD	14	11
ALM	26	13
EGND	27	23,24,25

2. Yaskawa drive unit connection diagram

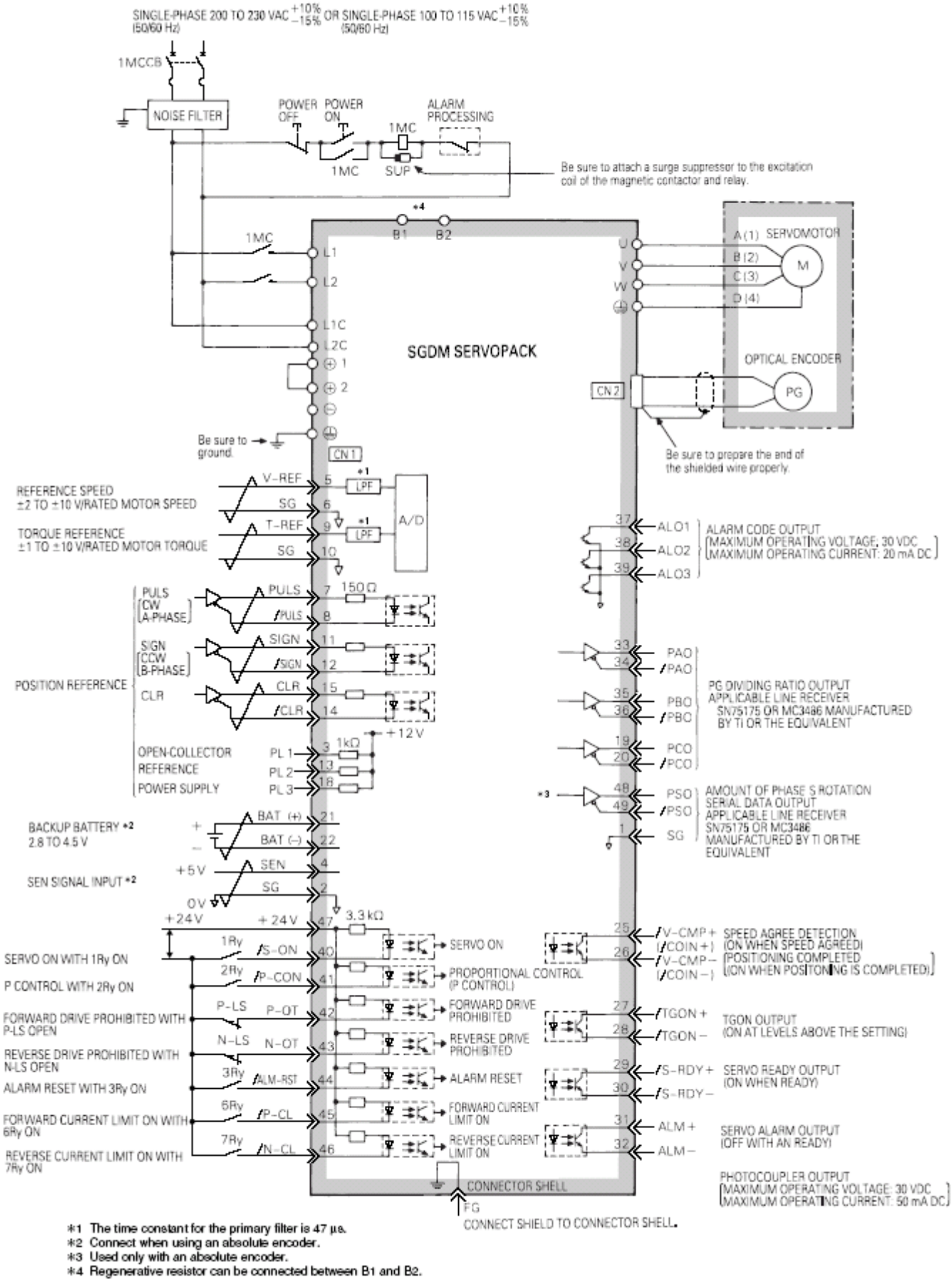

*1 The time constant for the primary filter is 47 μs.
*2 Connect when using an absolute encoder.
*3 Used only with an absolute encoder.
*4 Regenerative resistor can be connected between B1 and B2.

Fig. 10-10 Connection diagram of Yaskawa drive unit speed control mode

Table 10-2 GSK928GE corresponding and connection with Yaskawa drive unit

NAME OF SIGNAL	PIN NO. OF YASKAWA DRIVE	GSK928GE SERVO SIGNAL INTERFACE
A+	33	4
A-	34	5
B+	35	6
B-	36	7
Z+	19	8
Z-	20	9
DAC	5	3
AGND	6	14,15,16
+24V	47	20,21,22
ENABLE	40	12
ZEROSPD	41	11
ALM	31	13
EGND	32	23,24,25

3. DA98B drive unit connection diagram

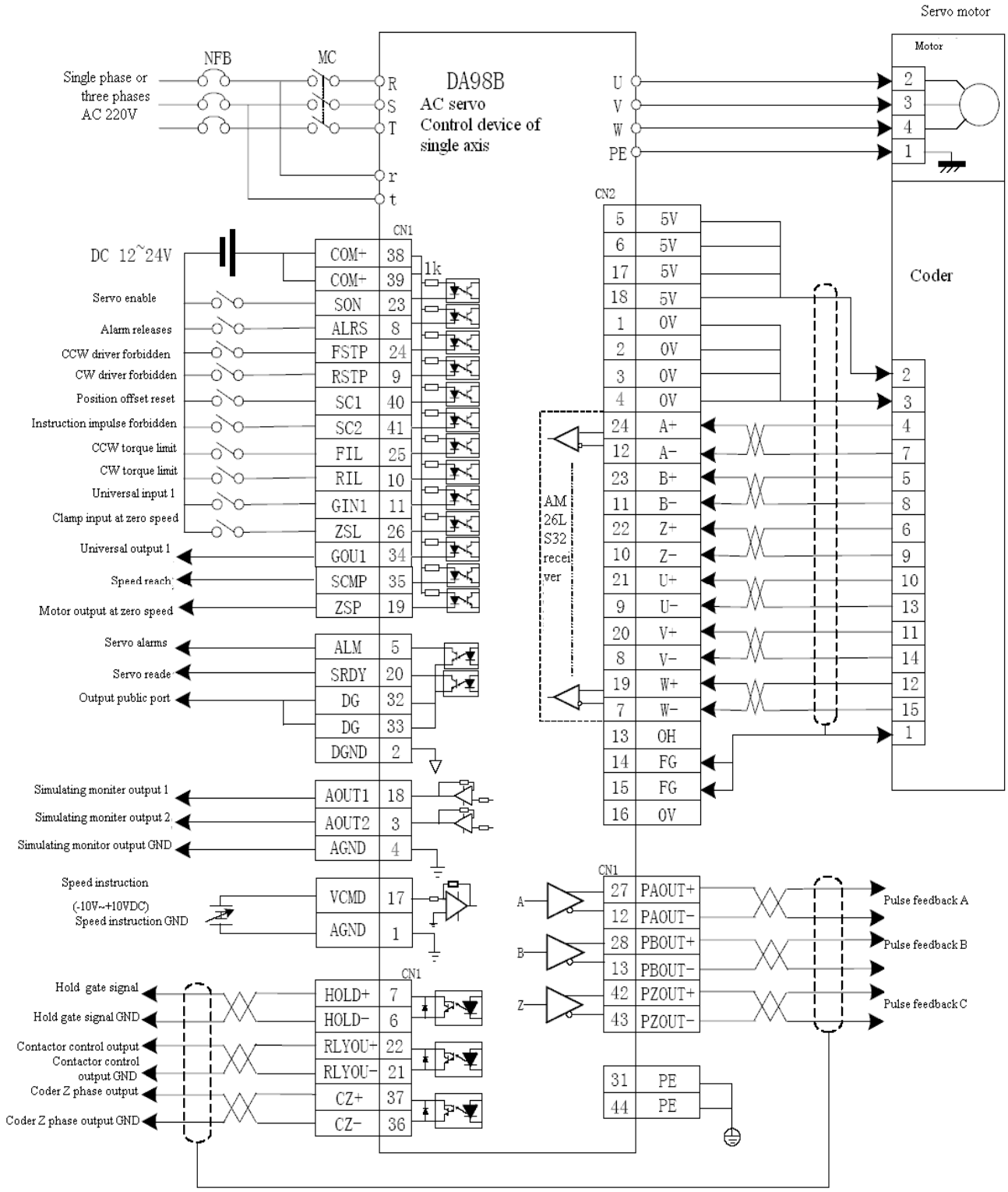

Fig. 10-11 Connection diagram of DA98B drive unit speed control mode

Table 10-3 GSK928GE corresponding and connecting with DA98B drive unit signals

NAME OF SIGNAL	PIN NO OF DA98B DRIVE	INTERFACE OF GSK928GE SERVO SIGNAL
A+	27	4
A-	12	5
B+	28	6
B-	13	7
Z+	42	8
Z-	43	9
DAC	17	3
AGND	1	14,15,16
+24V	38，39	20,21,22
ENABLE	23	12
ZEROSPD	26	11
ALM	5	13
EGND	32，33	23,24,25

10.4 Connection diagram of external signal input/output

10.4.1 Input interfaces of external signals

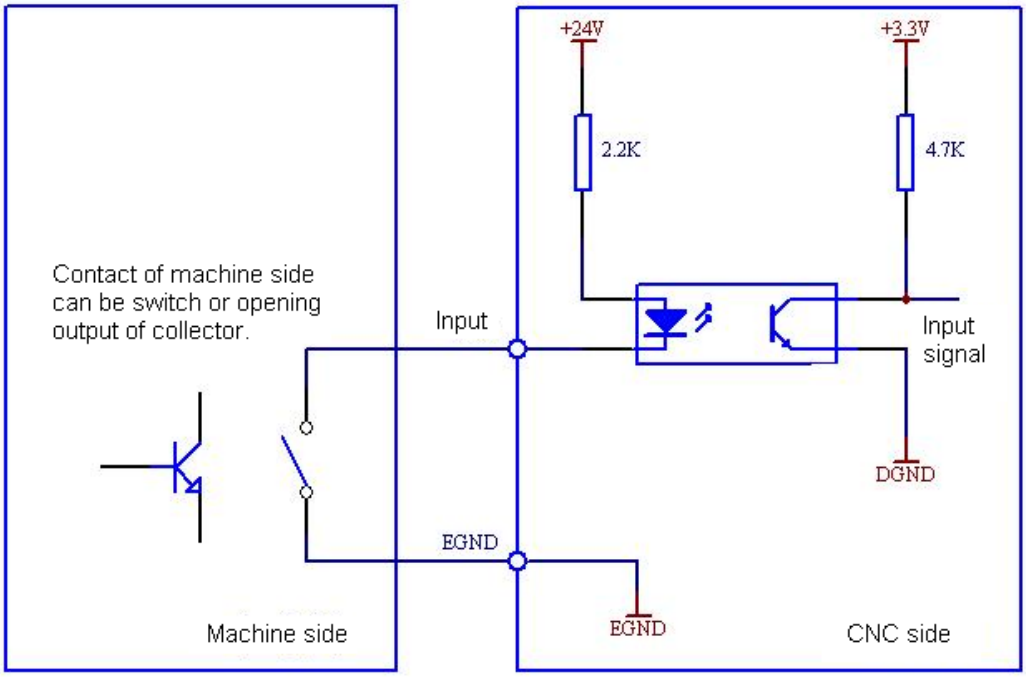

Remark: It is suggested that the external input signals use proximity switch in NPN type.

10.4.2 Output interface of the external signals

1. Relay connection

1.1 Relay connection with the internal 24V power supply of system

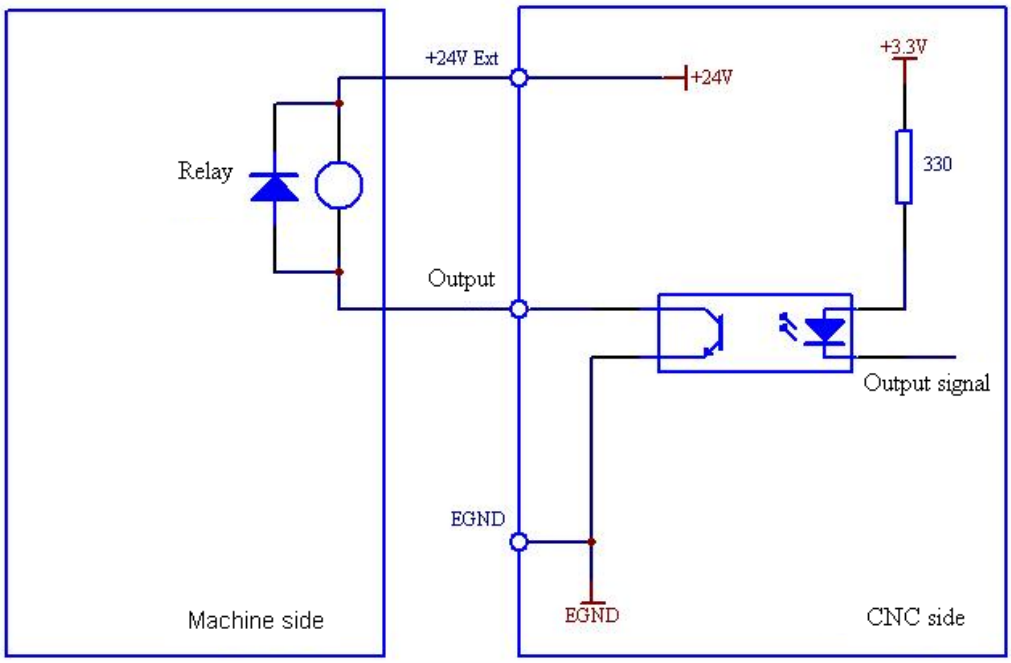

1.2 Relay connection with external 24V power supply

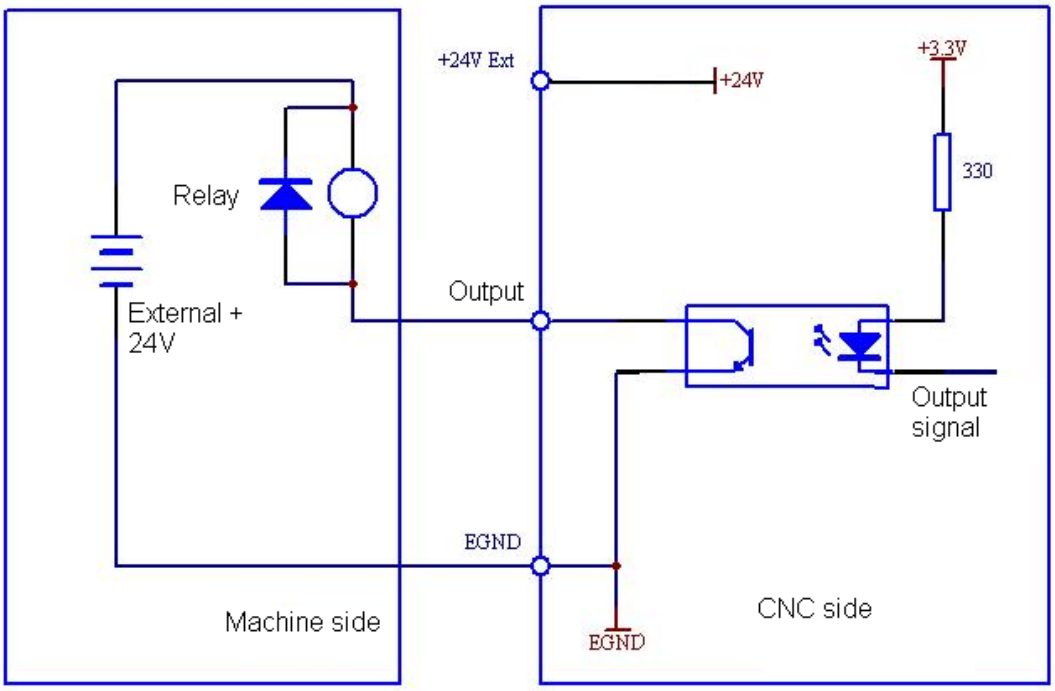

10.4.3 Connecting a photoelectric isolator

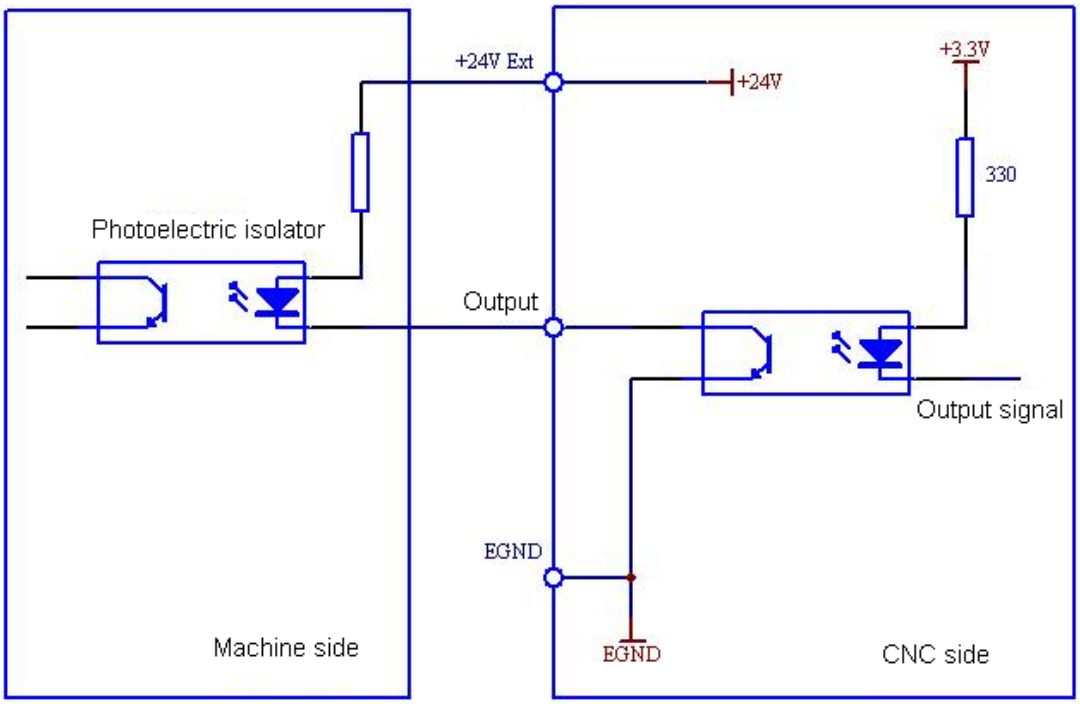

10.5 Installation dimension

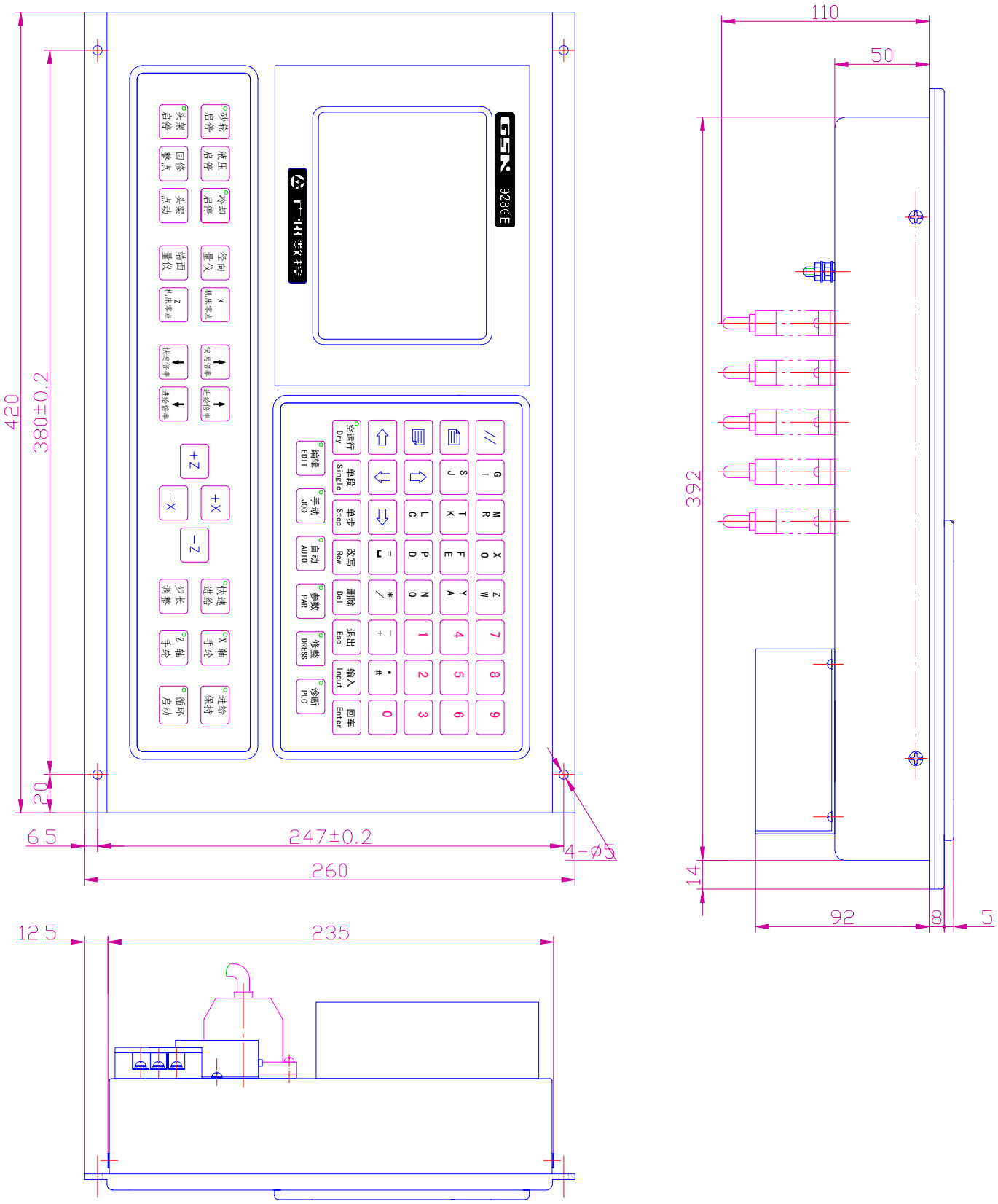

SECTION Ⅱ PROGRAMMING

Introduce the command, program format and editing, compiling error of GSK928GA/GE programming system.

CHAPTER 1 PROGRAMMING FUNDAMENTALS

CNC machining is to operate the tool, workpiece and other miscellaneous device of CNC machine according to the specified machining sequence and parameter and the tool path to manufacture the qualified workpiece. Editing CNC program is necessary in CNC machining. In details, editing CNC program is to make the file including the workpiece sequence, process arrangement and the tool corresponding to the path of workpiece movement, process parameter and miscellaneous movement, which is set based on the rules, codes and format. The common sequence is shown in figure 1-1:

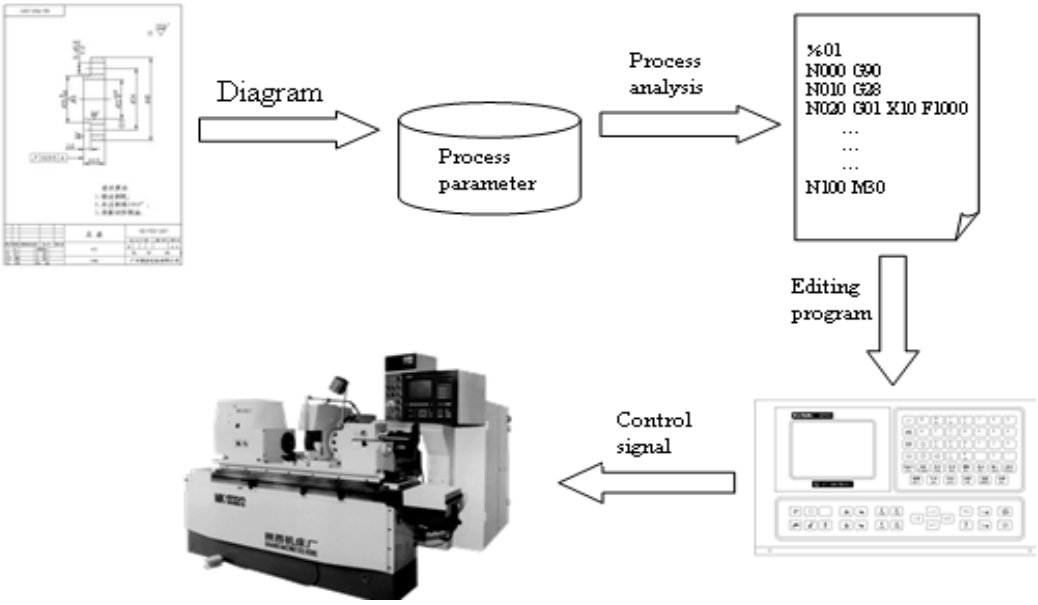

Fig.1-1 Editing process of CNC program

1.1 Coordinate systems of the cylindrical grinding machine

The machine coordinate system of grinding machine of external circle is shown in figure 1-2, and the specified definition of each axis in the coordinate system is below:

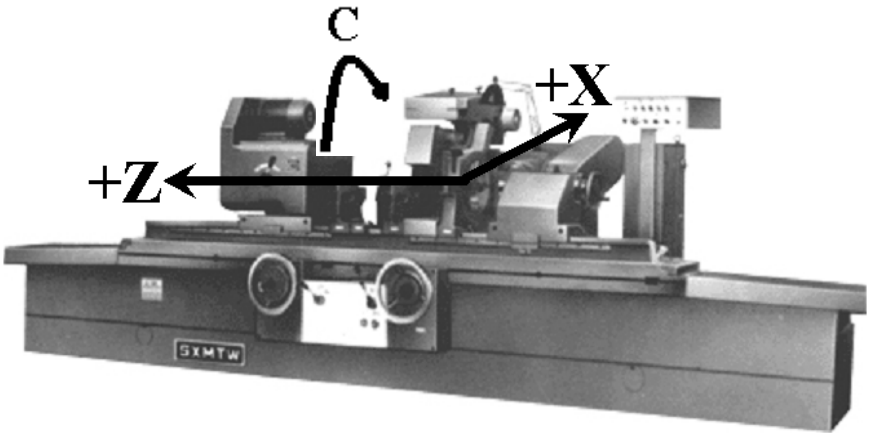

Fig.1-2 The machine coordinate system of cylindrical grinding machine

X axis: The coordinate axis, which is vertical to the rotation center line of spindle, stipulates that the direction is positive, which the grinding wheel base is far away from the rotation axis center of spindle.

Z axis: The coordinate axis, which coincides with the rotation center line of spindle, stipulates that the direction is positive that the machine head is far away from grinding wheel base.

C axis: It is stipulated that the axis rotates the right thread, and the direction toward Z axis positively is positive.

1.2 Machine zero

Machine zero is the point which is fixed on the machine. Generally, the machine zero point of CNC grinding machine is maximum limit of X and Z axes at the positive direction and install the corresponding machine zero return switch. When the machine zero return function is used, it can return the machine zero.

REMARK

The machine must install the machine zero return switch. Otherwise, during using the machine zero return function, the system can not find the machine zero point, which causes the over travel of worktable. If the situation is very serious, it may even damage the feed screw.

1.3 Programming coordinate system

Programming coordinate system is also called as workpiece coordinate system, and programmers use the coordinate system during editing CNC program.

Based on the dimension of workpiece and machining process, programmers take one fix point in the workpiece diagram as coordinate origin which is called program origin. Then, the program coordinate system can be created. The coordinate of the machine is not changed after the grinding machine dispatching from factory. However, the program coordinate can be changed because it is set by the programmers in CNC system. After set the programming coordinate, the mutual alignment relation between machine coordinate and program coordinate is fixed. The relations between each other are shown as figure 1-3:

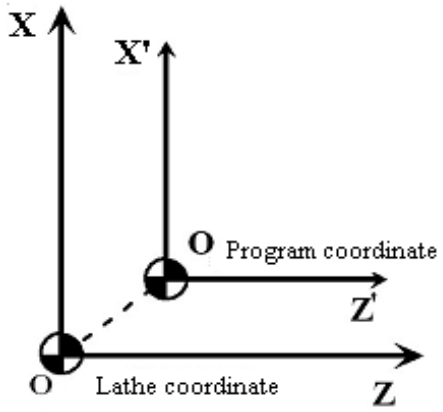

Fig.1-3 Program coordinate system

For convenience, programmers can select the absolute or relative coordinate during programming.

1.3.1 Absolute coordinate

The absolute coordinate is the coordinate value of each coordinate axis, and the value is corresponding to the measuring distance of program coordinate origin. The absolute coordinate of point A and B are in figure 1-4 respectively:

$$X_A = 30,\ Z_A = 30;\ X_B = 20,\ Z_B = 10$$

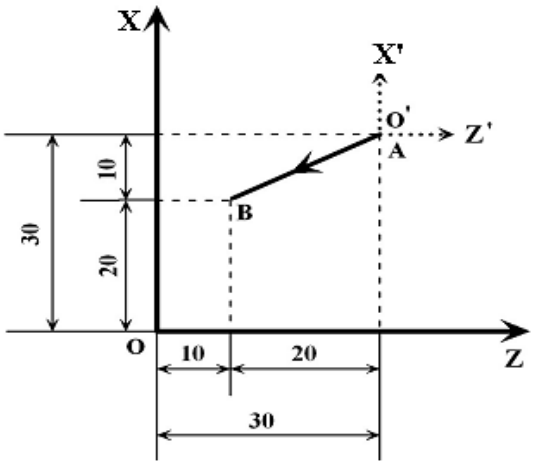

Fig.1-4 Program coordinate systems

1.3.2 Relative coordinate

The relative coordinate is also called the incremental coordinate, and the current coordinate value of each coordinate axis is the measuring distance corresponding to the last position. The relative coordinate of point B corresponding to point A is shown in figure 1-4:

$$X_B = -10,\ Z_B = -20$$

The negative sign represents point B corresponding to the negative direction of point A at X and Z axes.

1.4 Radius and diameter programming

During the part machining of the rotary machine, the cross section of workpiece normally is round shape. In the machining diagram, there mark diameter and radius dimensions. For convenience, the user can edit CNC part program based on the part diagram and CNC system provides two methods of radius and diameter programming.

During radius programming, X axis coordinate value of workpiece is specified by radius value; when the diameter programming is used, the X axis coordinate value of workpiece is specified by diameter value. Generally, X axis coordinate value in radius programming is half of X axis coordinate value in diameter programming; refer to figure 1-5.

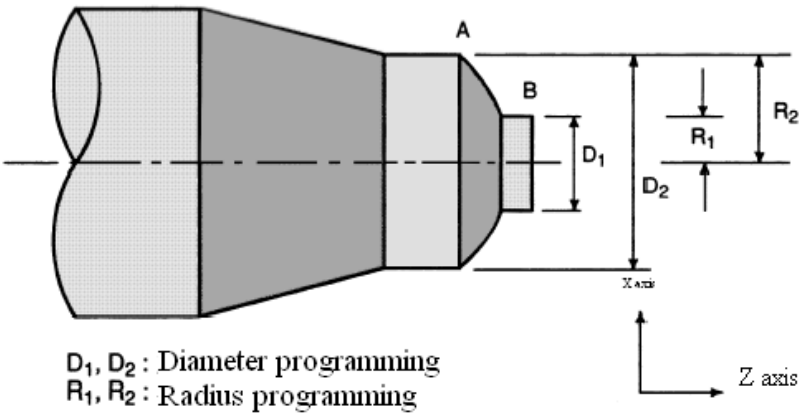

Fig.1-5 Radius and diameter programming

Pay attention to the meaning of numerical value in table 1-1 during using diameter programming.

Table 1-1 Notes of diameter programming

PROJECTS	NOTES
Command value of Z axis	Actual dimension value is not connected with radius and diameter programming.
Command value of X axis	Diameter value
Position display value of X axis	Diameter value
X axis feedrate	Radius variation value per minute
X axis backlash	Radius value
X axis pitch error compensation amount	Radius value

1.5 Program reference position

1.5.1 Reference position

A reference position is a safe and convenient position that the operator specifies according to the part machining and is also for grinding wheel urgent retraction during machining. Any position on the machine can be set as a reference position. Generally, the reference position is set in the safe position which is far away from the workpiece.

After setting the reference position, it is able to use the reference position return function to move the grinding wheel to the reference position in Jog and Auto modes. The system can save the data of the reference position as the parameter. The reference position which is set last time is still valid after the system switches off and restarts.

After CNC system switches on and initializes for the first time, if it doesn't set the program reference position, the system automatic sets the reference position as below:

X=0, Z=0.

1.5.2 Setting method

In Jog mode, press input key to set, and then press numerical key 0, and the screen is displayed *Set prog ref position?*

Press ENTER to specify and press ESC to cancel.

CHAPTER 2 PROGRAM STRUCTURE

CNC program is to start the machine, finish the part machining according to the specified requirements. The command sequence of program is made based on the process of workpiece machining. CNC system controls the grinding wheel movement along the straight line, starts and stops the grinding wheel chief shaft and cooling, etc, the machine miscellaneous movement and machines the qualified parts.

2.1 Composing a program

A complete program is composed of program number; program body and program stop code. Table 2-1 is regarded as the simple program structure.

%01	Program no
N0000 G90 **N0010 G28** **N0020 G01 X10 F1000** ← **Block** **…** **…** **…** **N0090 M08**	Program body
N0100 M30	Stop code of program

Table 2-1 Constitution of a CNC program

The program name is also called the file number to differ the ID of different programs.

The program body is composed of some blocks based on certain structure, grammar and format, and each block is made up of some fields.

The program stop code is to end the running of the whole program and adopts command of M02, M30 and M99. Strictly speaking, the program stop code is one block of program body.

The component of program in CNC system is introduced in details.

2.2 Program numbers

Program name begins from the address code % following the number of two integers. The user can select any program number from %00 to %99, and %99 is normally as the program number of grinding wheel automatic adjusting program.

During the system, program name is exclusive without repetition; therefore maximum 100 program files can be created.

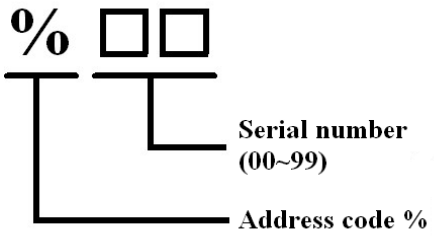

Fig. 2-2 Program names

When create the new program, the user can input the file number of program and enter the full screen edit interface, then the system generates the program number automatically, which is displayed in the menu bar rather than in the edit area and the user can not edit the program number. Therefore, once the program is created, the program name is specified. However, when use the communication interface of RS-232 to transit the program to CNC system, the beginning of program must be program number; otherwise, the field is not saved at the beginning.

2.3 Blocks

One block is composed of serial number and some fields. Each block includes maximum 255 fields which also has the blank between fields. The serial number of block is a must and automatic generated by system, but it can be modified during editing status.

The example of a complete block is as bellow:

N0020	G01	X10	F1000	M03
Serial No	Field 1	Field 2	Field 3	Field 4
	Preparing function	Movement data	Feed rate	Miscellaneous function

Fig. 2-3 Blocks

REMARK

1. Each field in the block is separated by blank. The system automatic generates the blank during input. But during editing, the system can not tell the separation of field, the operator should input the blank by themselves to guarantee the integrality of the program.

2. Although the position of field in the block can be changed at random, the integrality of the program should be guaranteed. It is strongly suggested that program should be edited in the uniform format to improve the readability.

3. Each program ends by pressing ENTER, but it isn't displayed on the screen.

2.3.1 Serial numbers

The serial number is composed of address code "N" and numbers of four integers as figure 2-4

shows. During editing, the system can automatic generate and is changeable.

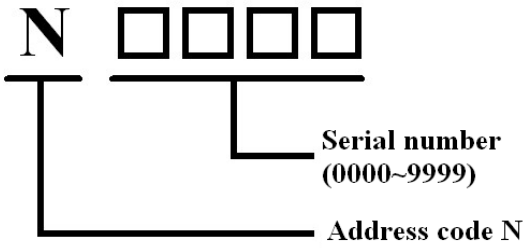

REMARK

CNC program is executed based on the input sequence of block rather than the serial number of block. It is suggested that the serial number should be edited according to the sort ascending and try not to use the repeated serial number.

2.3.2 Fields

The field is made up of address code and digit, as figure 2-5 shows. The filed can be instruction, movement data or other miscellaneous parameter.

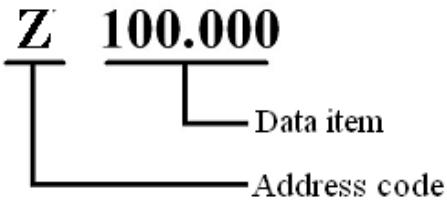

Fig. 2-5 field

REMARK

1. Each field must begin from the address code of English letter following the serial digit fields without blank.

2. The invalidation of "0" in data item can be omitted.

3. The positive sign of digit can be omitted rather than negative one.

2.3.3 Characters

Character is the basic components of program. The system includes English letter, digit and some special character; refer to the table 2-1. About the specified meaning of address code and following range of data item, please also refer to the table 2-2.

Table 2-1 Fields

Type	Character	Remark
English letter	G、F、X、Z、M、N、D、P、L、I、K、R、Q、T…	Address code
Digit	1、2、3、4、5、6、7、8、9、0	Value
Code	%	Program beginning code
	—	The negative sign of value and minus sign
	.	Decimal point of value
	#	Address code of macro variable
	/	Optional block skip and division sign
	＋	Plus sign
	*	Multiplication sign
	＝	Equal sign

Table 2-2 Address code

Address code	Function	Meaning	Data item		
			Range	Type	Unit
G	Preparing function	Movement mode	00~99	Integer	
M	Miscellaneous function	Miscellaneous movement instruction	00~99	Integer	
F	Speed function	Speed of cutting and feeding	0~8000.000	Floating	mm/min
X and Z	Coordinate	Coordinate value of X and Z axis	-8000.000~+8000.000	Floating	mm
I and K	Coordinate	Radius coordinate	-8000.000~+8000.000	Floating	mm
R	Coordinate	Radius	0.001~+8000.000	Floating	mm
N	Serial number	Serial number of block	0000~9999	Integer	
D	Time	Dwell time	0.001~99.999	Floating	1s
P	Line number	Jump initial line number or subprogram number	0000~9999	Integer	
Q	Line number	Complete line number	0000~9999	Integer	
L	Times/lines number	Calling times of subprogram or specified line number	1~99	Integer	
O	Coordinate	Retraction amount of cutting	0～100.000	Floating	mm
W	Coordinate	Feeding amount of cutting	0～100.000	Floating	mm

2.4 Program end code

The last line of program must be ended with an end code; otherwise, the system is considered as an incomplete program and can not be edited. The main program is ended with M30 or M02, and the subprogram is ended with M99.

REMARK

The system is to simulate the actual execution sequence of program to check the stop code of program. As long as it runs into the stop code, it is assumed that the program ends and the following programs are not executed.

2.5 Subprograms

During machining, the same fixed operation is executed repeatedly, like the grinding layer by layer, each process is same. In program, the code of fixed sequence repeatedly appears correspondingly. Then, the code of fixed sequence can be separated as an independent subprogram file and saved in the memorizer. It doesn't need to repeatedly edit in order to simplify the program. The original machining program is called as the main program. The constitution of subprogram and that of the main program is exactly same except M99 end code.

2.5.1 Program calling process

When the main program operates the machining in the fixed cycle, it can use M98 to directly call the corresponding subprogram and the system enters the subprogram to execute the relative codes; when the system executes M99, the system returns to the main program and continues to execute the codes after M98. Concerning the specified calling process, it is shown in figure 2-6. About M98 and M99, refer to chapters 3.3.8 and 3.3.9.

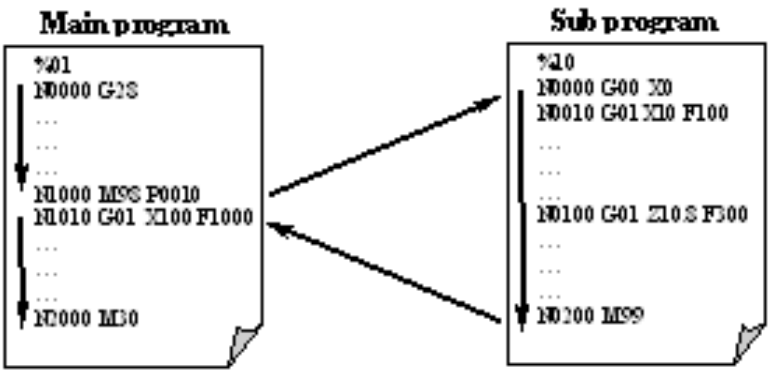

Fig. 2-6 Subprogram calling process

2.5.2 Subprogram nested calling

During subprogram, the other subprogram can be called, which is called as the nested calling of the subprogram. But the subprogram can not be called by itself, that is to say, the subprogram can not recur to call the subprogram. The system can support calling maximum two subprograms, which is shown in the figure 2-7:

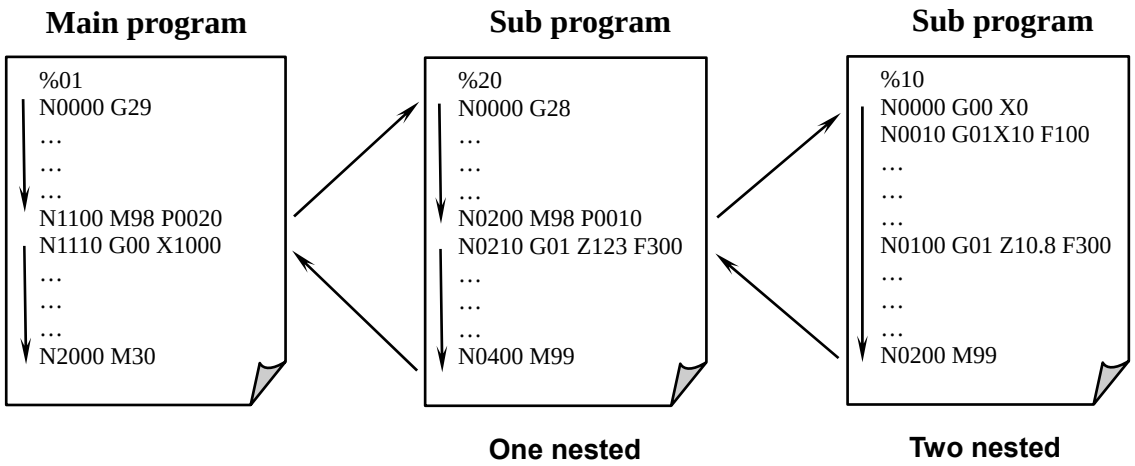

Fig. 2-7 Subprogram nested calling

REMARK

Only main program can run independently, a subprogram can only be called by main program without independent running. But in Auto mode, if the subprogram is called by the main program, the subprogram can run independently.

CHAPTER 3 COMMAND CODE FORMAT and FUNCTION

GSK928GE CNC system is exclusive for grinding machine, and its command system abides by the ISO code standard, which also increases the specified command of grinding machine. The system command is divided into G code command (preparing function) and M code command (miscellaneous function). This chapter introduces the function of code commands, format and the detailed operation method in details.

3.1 Mode and one-shot commands

According to the state of mode, the system commands are divided into the mode and one-shot ones. The mode command means that once it is executed, its function remains valid until it is replaced by the command of the same group. That is to say, after inputting the mode command, if the command is used in the following block, it doesn't require inputting the command again while just inputting the following parameter directly. The mode command of the system and its group are shown in table 3.1:

Table 3-1 Group of mode commands

GROUP	COMMANDS
1	G90, G91, S
2	G00, G01, G02, G03, G94, G95
3	F

The one-shot command is only valid in the block which is input. When the block ends, the command becomes invalid. In the following block, if the same command is used, it requires inputting again. Except the commands in table 3-1, others in the system are one-shot.

3.2 G function — preparing function

G code command specifies the relative movement path of grinding wheel and workpiece and program method of selective coordinate system and so on, which is composed of address code G and the following two digits. The leading "0" of G command can be omitted, for example, G01 and G1 are equivalent and all G function codes in the system, which are shown in the table 3-2.

Table 3-2 Function of G codes

COMMANDS	FUNCTION	STATE	PARAMETER	REMARK
G00	Urgent position	Mode	X,Z	The maximum speed of movement set by the system
G01	Linear interpolation	Mode	X,Z,F	Feedrate is specified by parameter F.
G02	interpolation	Mode	X,Z,I,K,R,F	Feedrate is specified by parameter F
G03	Interpolation	Mode	X,Z,I,K,R,F	Feedrate is specified by parameter F.
G31	Interpolation	Mode	X,Z,P,F	Measuring instrument on-line measures the signal and the jumping
G04	Dwell	One-shot	D	program execute dwell
G27	Grinding wheel returns to the dressing position	One-shot	F	Feed rate is specified by parameter F
G28	Return to X axis reference position	One-shot	Null	The maximum movement speed set by system
G29	Return to Z axis reference position	One-shot	Null	The maximum movement speed set by system
G37	Return to C axis reference position	One-shot	Null	The maximum movement speed set by system
G30	Feeding compensation	One-shot	X,Z	Feeding at the minimum unit of calculation (micron) (μm)
G39	Macro variable evaluation	One-shot	X,Z	Give the macro variable to the current program coordinate value
G71	Grinding compound cycle	One-shot	X(Z),O,W,F,L	
G90	Absolute coordinate value input	Mode	Null	Absolute coordinate program (the fault status of system)
G91	Relative coordinate value input	Mode	Null	Incremental coordinate program
G94	Feedrate per minute	Mode	F	Directly specify the feedrate/min
G95	Feedrate per revolution	Mode	F	Feed rate of cutting at mm/r

3.2.1 G90 and G91 — absolute and incremental coordinate programming

● Format

G90

G91

● Function

G90: Absolute coordinate system programming command, take the coordinate value of moving final position as parameter for programming.

G91：Incremental coordinate system programming command; take the moving amount of moving final position corresponds to the start point as parameter for programming.

● Usage example

In the figure 3-1, the grinding wheel moves from point A to point C and passes point B. About the code of absolute coordinate program and incremental coordinate program, refer to examples 3-1 and 3-2.

REMARK

After the system is switched on, the system defaults the absolute coordinate programming (G90) if there is no specified coordinate programming mode.

3.2.2 G00 — rapid position

- Format

  G00 X_ Z_

- Parameter item

  X — **X** axis coordinate, unit: mm

  Z — Z axis coordinate, unit: mm

- Function

  Move the grinding wheel to the specified position at the fastest speed.

- Usage example

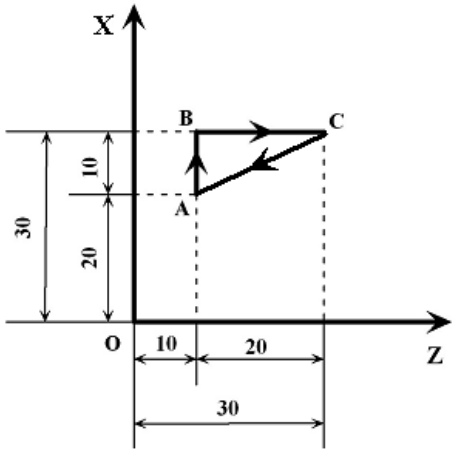

Fig. 3-1 G00 rapid position

Example 3-1 in the figure 3-1, the grinding wheel rapidly moves from point A to point C and passes point B, then return to point A, which is required to use the absolute coordinate program.

N0010 G90 G00 X30

N0020 G00 Z30

N0030 G00 X20 Z10

Example 3-2: In the figure 3-2, the grinding wheel rapidly moves from point A to point C and passes point B, finally, returns to point A, which is required to use the incremental coordinate program.

N0100 G91 G00 X 10

N0200 G00 Z 20

N0300 G00 X-10 Z-20

REMARK

1. The moving speed of G00 is specified by parameters P005 and P006, and it is also controlled by rapid override.

X axis actual rapid speed = P005 X rapid override

Z axis actual rapid speed = P006 X rapid override

2. Without special explanation, the command value in the example always uses radius programming.

3.2.3 G01 — linear interpolation

- Format

G01 X_ Z_ F_

- Parameter item

  X ---- X axis coordinate, unit: mm;

  Z----Z axis coordinate, unit: mm;

  F----Feed rate, unit: mm/min.

- Function

Move the grinding wheel from the current point to the position of target point along the direction of specified coordinate axis at the setting speed.

- Usage example

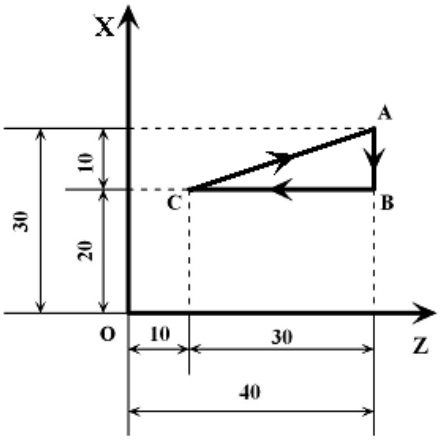

Fig. 3-2 G01 linear interpolation

Example 3-3 in the figure 3-2, the grinding wheel moves from point A to point C and passes point B, finally returns to point A, which is required to use absolute coordinate program.

N0010 G90 G01 X 20 F 500

N0020 G01 Z 10 F500

N0030 G01 X30 Z 40 F500

Example 3-4: In the figure 3-1, grinding wheel moves from point A to point C and passes point B, finally returns to point A, which is required to use incremental coordinate program.

N0100 G91 G01 X -10 F1000

N0200 G01 Z -30 F1000

N0200 G01 X10 Z 30 F1000

REMARK

The running speed of G01 is specified by F parameter and controlled by feedrate override.

Actual feedrate = F X feedrate override

3.2.4 G02 and G03 — circular interpolation

- Format

$$\left.\begin{matrix}G02\\G03\end{matrix}\right\}X\_Z\_\left\{\begin{matrix}I\_K\_\\R\_\end{matrix}\right\}F\_$$

- Parameter items

X----X axis coordinate, unit: mm;

Z----Z axis coordinate, unit: mm;

I---- The amount from the start point of the circular to the central vector at X axis, unit: mm.

K----The amount from the start point of the circular to the central vector at Z axis, unit: mm

R----circular radius, unit: mm;

F----feedrate, unit: mm/min.

- Function

G02: clockwise circular interpolation.

G03: counter-clockwise circular interpolation.

- Usage example

Clockwise or counter-clockwise is the rotary direction that is seen from the positive direction of flat coordinate which is vertical to circular in the right-handed coordinate system, which is shown in the figure 3-3.

I and K is the coordinate of specified center of a circle, which is incremental value, refer to figure 3-4.

I= Central X coordinate---- X coordinate of circular start point

K= Central Z coordinate----Z coordinate of circular start point

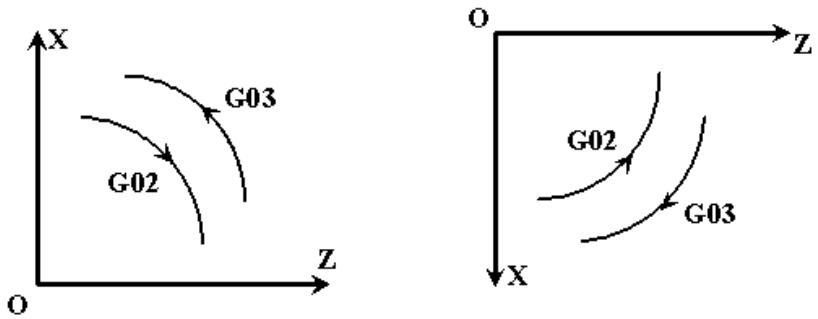

Fig. 3-3 Circular interpolation direction

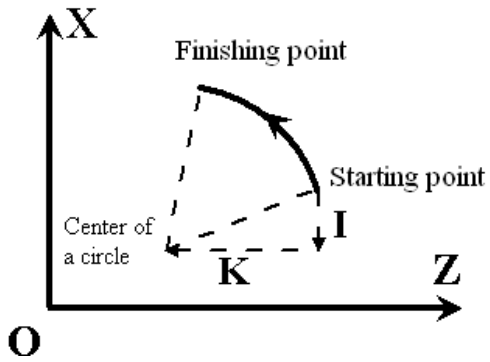

Fig. 3-4 I and K values

Example 3-5 Adjust the grinding wheel outline curve ABC; the speed is 100mm/min, which is required to use the absolute coordinate program.

N0010 G90 G03 X 30 Z30 R25 F 100

N0020 G02 X 30 Z10 R10 F100

or N0010 G90 G03 X 30 Z30 I0 K-15 F 100

N0020 G02 X 30 Z10 I0 K-10 F100

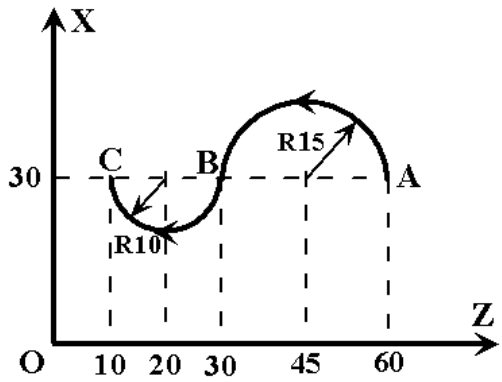

Fig. 3-5 Circular interpolation

Example 3-6: Adjust the grinding wheel outline curve ABC; the speed is 1800mm/min, which is required to use the absolute coordinate program.

N0000 G90 G0 X15 Z26

N0010 G03 X 0 Z-30 R30 F 1800

N0020 G03 X-15 Z-26 R30 F1800

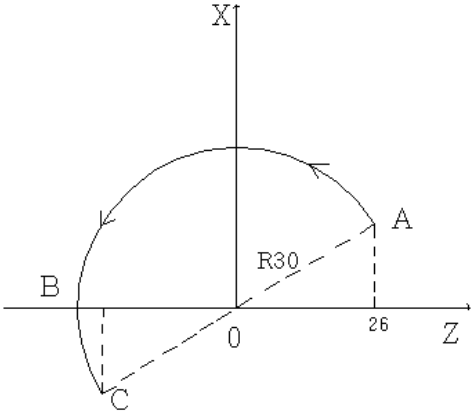

Fig. 3-6 Circular subsection interpolation

REMARK

During drawing the circular, pay attention to it that start and end points of the circular must be at the same side as Z axis which the center of circle is located, that is to say, it should be in the range of 0º～180º or 180º～360º, otherwise, process in section. And it can verify the program through dry running, otherwise, it alarms because of wrong parameter.

3.2.5 G04 — fixed time dwell

- Format

  G04 D _

- Parameter item

  D — dwell time, unit: 1S.

- Function

  Set the interval time between executing two blocks.

- Usage

Example 3-9: Dwell for 2.5 seconds

N0010 G04 D 2.5

3.2.6 G27 — grinding wheel returning to X axis dressing position

- Format

  G27 F_

- Parameter item

  F — feedrate, unit: mm/min

- Function:

The grinding wheel returns to the dressing position along X axis direction at setting speed.

- Usage example

Example 3-10 Return to dressing position.

N0010 G27 F1000

REMARK

The running speed of G27 is specified by parameter F and is controlled by feedrate override.

The actual feedrate=F X feeding times

3.2.7 G28 and G29 — X and Z axes returning to the reference position

- Format

G28

G29

- Function

G28: Grinding wheel returns to X axis reference position along X axis direction at the fastest speed;

G29: Grinding wheel returns to Z axis reference position along Z axis direction at the fastest speed;

- Usage example

Example 3-11：Return to the reference position:

N0010 G28

N0020 G29

REMARK

1. G28 and G29 can control X or Z axis, that is to say, the X axis and Z axis can not return to the reference position at the same time.

2. The movement speed of G28 and G29 can be specified by parameters P005 and P006, and is also controlled by rapid override.

G28 actual movement speed=P005 **X** rapid override

G29 actual movement speed=P006 **X** rapid override

3.2.8 G37 — C axis returning to the reference position

- Format

G37

- Function

G37：Control axis returns to C axis reference position along C axis direction at the fastest speed.

- Usage explanation

G37 is for returning to the reference position when the second spindle is assumed as the position axis or the rotational axis, which is corresponding to G28 and G29.

3.2.9 G30 — feeding compensation

- Format

G30 X_ Z_

- Parameter item

X_----Feeding compensation amount is required to compensate the control axis and value of compensation amount. The unit is 0.001mm.

- Function

During grinding, because of material of workpiece or grinding wheel actual wear, the error should be compensated. The system switches the compensation amount into the control unit of the least output which is the pulse equivalent value and accurately compensate. The program coordinate of which has completed compensation is not affected, but the machine coordinate changes according to the compensation amount.

- Usage example

Example 3-7: As figure 3-7, the wearing capacity from point A to point B is 15μm when the grinding wheel feeds at X axis direction. The wearing capacity from section AB to section CD can not be ignored according to the following absolute programming method:

```
N0000  G90  G0  X20  Z0
N0010  G01  Z30  F2000
N0020  X10
N0030  G30  X15
N0040  G01  Z40
N0050  M30
```

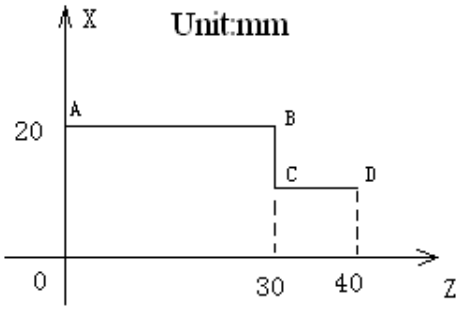

Fig. 3-7 Feeding compensation

3.2.10 G31 — interpolation skip

- Format

$$G31\left\{\begin{matrix}\left.\begin{matrix}G00\\G01\end{matrix}\right\}X\_Z\_F\_\\ \left.\begin{matrix}G02\\G03\end{matrix}\right\}X\_Z\_\left\{\begin{matrix}I\_K\_\\R\_\end{matrix}\right\}F\_\end{matrix}\right\}P\_$$

- Parameter item

P---Detect the external skip signal. The skip signal depends on the external measuring instrument signal, and the system has defined four signals from 1 to 4. If it's required, it can be extended into 8. About the details, refer to PLC input definition.

- Function

During interpolation of linear or circular, if the specified external measuring instrument skip signal has been detected, the current interpolation signal has been cut off and then the command of the next program line is executed. The command is normally for detecting the measuring instrument signals to control grinding the workpiece.

- Usage example

G31 is followed by the interpolation commands including G00, G01, G02 and G03 (G00 and G01 can not be omitted during programming), and the skip signals are after them. Based on the actual setting, about the detailed definition, refer to PLC.

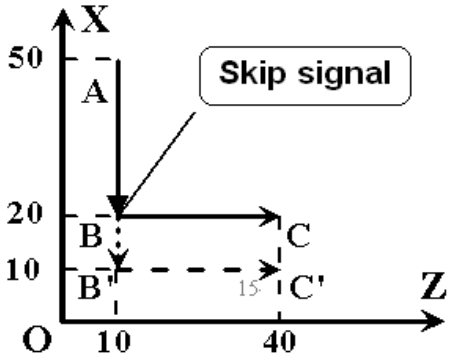

Fig. 3-8 Interpolation skip

Example 3-8: In the figure 3-8, the grinding wheel is moved from point A to point B′ at the speed of 100mm/min, and the skip signal P1 is detected, finally moved toward point C′ , which is required to use absolute coordinate program.

N0000 G90

N0010 G31 G01 X10 P1 F100

N0020 G01 Z40

If the skip signal is not detected, the ideal movement path of the grinding wheel is AB′C′. However, because the system has detected the external skip signal P1 at point B, the system stops executing

block N0010, skips to block N0020 and moves to point C. Therefore, ABC is the actual movement path of the grinding wheel.

3.2.11 G39 — macro variable assignment

- Format

G39 $\left\{ \begin{matrix} X \\ Z \end{matrix} \right\}$ #_

- Function

G39: The current coordinate value of X or Z axis is assigned to the macro variable (floating macro variable) to be defined.

- Usage example

Example 3-11: The present X axis coordinate is assigned to macro variable #001, and Z axis should be executed toward value #001 at G00 mode.

N0010 G39 X＃001

N0020 G00 Z＃001

REMARK

The speed function of G39 is not only limited in the assignment, but it mainly applies to the macro variable and the calculation and comparing function of macro command in the chapters 3.5 and 3.6. Then, it can realize skip under the rich conditions and make the user program more flexible. About the details, refer to the comprehensive programming examples in the fifth chapter.

3.2.12 G71 — grinding comprehensive cycle

- Format

G71 X（Z）_ W_ O_ L_ F_

- **Parameter item**

X (Z) ----It requires selecting the axial direction and setting value of grinding surplus during cycle, the range is 0~8000.000.

W----the feeding amount of grinding in axial direction each cycle, setting range: 0~100.000

O----retraction amount in axial direction when each cycle finishes, setting range: 0~100.000

L----Describe the block number, which doesn't include itself, of final path, range: 1~99

F----Cutting speed during cycle

- **Function**

Realize the cycle function between commands.

- **Usage example**

Example 3-11 the shape of semi-finished product is shown in figure 3-9 and the dimension is shown as below, and the path ABCD is the final destination dimension of grinding, point E is the program reference position, the coordinate (100,100) uses G71 to realize the function of grinding.

```
N0000  G28
N0010  G29
N0020  G71  X25  W0.2  O3  L4  F500
N0030  G1  X5  Z45  F1000
N0040  Z35
N0050  X15  Z15
N0060  X20
N0070  G0  X100  Z100
N0080  M30
```

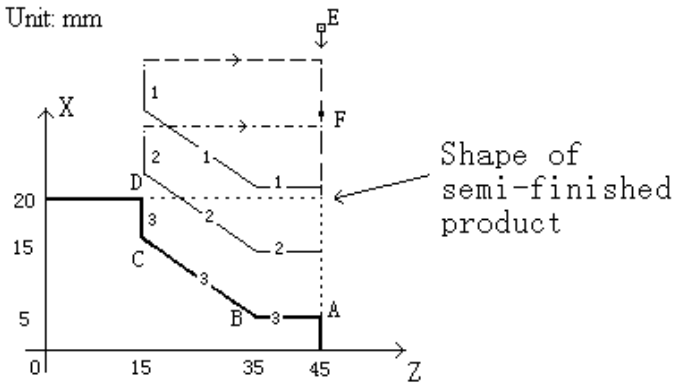

Fig. 3-9 G71 Grinding compound cycle

As it is stated in the above program, the executing process is:

a) The tool quickly sets the reference position(G28 and G29)

b) Along the setting feeding axis direction which is X axis and reaching point F at F1500 speed, the coordinate value of point F is the final path starting coordinate of workpiece and the grinding capacity of the axis.

c) The feeding distance W at speed of F1500.

d) Grind and cut along the workpiece path at speed of F1500.

e) After completing the grinding, retreat O distance along the setting coordinate axis, then quickly set the start point of the path grinding of the last time.

f) Repeat the process from c) to e) until finish the specified path, the cycle time is counted by system automatically. If feeding amount is less than the amount of one time, the system firstly executes the cycle of grinding setting amount which is less than one time during pre-treatment.

g) After cycle, the tool remains at the end point of the final section of last path.

REMARK

The speed during path cycle is specified by G71, and the cutting cycle direction is only allowed to define X or Z direction in its own block;

The dimensions of X and Z in the block, in which G71 describes the final path, may be non-monotonic;

In the cycled path of G71, it is forbidden to use the subprogram, vise verse;

The grinding surplus set in G71 cycle must be the max cutting amount of rough workpiece; otherwise, too much grinding amount may crack the grinding wheel.

3.2.13 G94 — Feedrate per minute

- Format

G94 F_

- Parameter item

F—set the feedrate of interpolation command which is behind F and takes feedrate per minute, which can be omitted. The range is from 000.000 to 8000.000, and the unit is mm/min.

- Function

The unit of feedrate is mm/min, G94 is G modal command and the system is at the status of initialization.

3.2.14 G95 — Feedrate per revolution

- Format

G95 F_

- Parameter item

F—set the feedrate of interpolation command which is behind F and takes feeding per revolution as unit. The range is from 000.000 to 500.000 and the unit is mm/r.

- Function

It takes mm/r as unit and set the feedrate of grinding, G95 is modal command G. At present, G95 is modal and doesn't need to input G95. When the system executes G95 Fxxxx, it takes the product which F command value (mm/r) times current spindle revolution (r/min) as the command feedrate to control the actual grinding feedrate. The speed of spindle is changed, and the actual cutting feedrate is also changed.

G94 and G95 are modal command G in the same team; while one is valid at the same time until specify the command in one team. G94 is in the status of initialization when the system is switched on, it defaults G94 as valid. The conversion format of feeding per revolution and feeding per minute is as below:

$$F_m = F_r * S$$

Among them: F_m: Feeding per minute (mm/min)

F_r: Feeding per revolution (mm/min)

S: Spindle speed (r/min)

3.3 M function — miscellaneous function

M code command is mainly for controlling movement of various miscellaneous function switches in the machine and the executing sequence of spare parts. M code command is composed of address code M and following two integers. The function M which is adopted by the system is shown in the table 3-3.

Table 3-3 M function codes

SERIAL NUMBER	M CODES	FUNCTION	PARAMETER ITEM	REMARK
1	M00	Program stops running temporarily	Null	
2	M02	Program ends	Null	
3	M30	Program ends, turn off the cooling and spindle	Null	
4	M03	Grinding wheel spindle runs	Null	
5	M05	Grinding wheel spindle stops	Null	
6	M08	Cooling switches on	Null	
7	M09	Cooling fluid switches off	Null	
8	M10	Tailstock control withdraw 1	Null	
9	M11	Tailstock control withdraw 2	Null	
10	M12	Machine-head runs	Null	
11	M13	Machine-head stops	Null	
12	M14	Hydraulic switches on	Null	
13	M15	Hydraulic switches off	Null	
14	M18	Starting and stopping valve control 1	Null	
15	M19	Starting and stopping valve control 2	Null	
16	M33	Spindle turns	Null	
17	M35	Spindle stops	Null	
18	M40	Activate X axis MPG	Null	
19	M41	Activate Z axis MPG	Null	
20	M50	Angular axis linkage	Null	
21	M51	Cancel angular axis linkage	Null	

22	M97	Unconditional branch	P	P is number of the block
23	M98	Call subprogram	P	P is number of the subprogram
24	M99	Subprogram returns	Null	
25	M70	Measuring instrument (radial) enters	Null	
26	M75	Measuring instrument (radial) withdraws	Null	
27	M78	Measuring instrument (axial) enters	Null	
28	M79	Measuring instrument (axial) withdraws	Null	
29	M16	User output 1 is valid	D	D is pulse width of output signal
30	M17	User output 1 is invalid	D	
31	M20	User output 2 is valid	D	
32	M21	User output 2 is invalid	D	
33	M22	User output 3 is valid	D	
34	M23	User output 3 is invalid	D	
35	M24	User output 4 is valid	D	
36	M25	User output 4 is invalid	D	
37	M26	User output 5 is valid	D	
38	M27	User output 5 is invalid	D	
39	M28	User output 6 is valid	D	
40	M29	User output 6 is invalid	D	
41	M46	User 7 output is valid	D	
42	M47	User 7 output is invalid	D	
43	M48	User output 8 is valid	D	
44	M49	User output 8 is invalid	D	
45	M81	User input 1 is valid for waiting	P	P is transferred block number
46	M82	User input 1 is invalid for waiting	P	
47	M83	User input 2 is valid for waiting	P	
48	M84	User input 2 is invalid for waiting	P	
49	M85	User input 3 is valid for waiting	P	
50	M86	User input 3 is invalid for waiting	P	
51	M87	User input 4 is valid for waiting	P	
52	M88	User input 4 is invalid for waiting	P	

3.3.1 **M00** — Pause

- Format

  M00

- Function

The program is stopped running temporarily with M00, so the operator can begin the other operation. Press running key, the program can run again.

REMARK

The function of M00 is different from that of remaining key. M00 command is edited in the program in advance according to the requirement, and executes the block, then it automatic dwells; but the remaining key of feeding can stop executing program at any time with great randomness.

3.3.2 **M02** — Program end

- Format

  M02

- Function

Program ends, returns to the first block and waits for executing in the next time.

3.3.3 **M30 —** Program end, spindle stop and cooling off

- Format

  M30

- Function

Program ends, stop the spindle of the grinding wheel and switch off the cooling, return to the first block and wait for executing in the next time. M30 is equivalent to the three commands of M02, M09 and M05.

3.3.4 **M03 and M05 —** Grinding wheel spindle control

- Format

  M03

  M05

- Function

  M03：Start the spindle of grinding wheel

  M05：Stop the spindle of grinding wheel

3.3.5 **M08 and M09 —** Cooling control

- Format

  M08

  M09

- Function

  M08：Switch on the cooling

  M09：Switch off the cooling

3.3.6 **M10** and **M11** — Tailstock control

- Format

  M10

  M11

- Function

  M10：The tailstock control 1

  M11：The tailstock control 2

3.3.7 **M12** and **M13 —** Machine-head control

- Format

  M12

  M13

- Function

  M12：The machine-head rotating is switched on

  M13：The machine-head is stopped

3.3.8 **M14** and **M15 —** Hydraulic control

- Format

  M14

  M15

- Function

  M14： The hydraulic is switched on.

  M15： The hydraulic is switched off.

3.3.9 **M18** and **M19 —** On/off valve control

- Format

  M18

  M19

- Function

  M18：The on/off valve control 1.

  M19：The on/off valve control 2.

3.3.10 **M33** and **M35 —** Spindle (the second spindle) control

- Format

  M33

  M35

- Function

  M33：The spindle runs.

  M35：The spindle stops.

3.3.11 **M70** and **M75 —** Measuring instrument head (radial) control

- **Format**

  M70

  M75

- **Function**

  M70：The measuring instrument head (radial) is advanced.

  M75：The measuring instrument head (axial) is retracted.

3.3.12 **M78** and **M79 —** Measuring instrument head (axial) control

- Format

  M78

  M79

- Function

  M78：The measuring instrument head (radial) is advanced.

  M79：The measuring instrument (axial) is retracted.

3.3.13 **M40** and **M41** — Activating MPG

- Format

  M40

  M41

- Function

M40：The program enters feed hold state and the system activates X axis MPG; Press cycle start key, the program continues to execute from the next command.

M41：The program enters feed hold state and the system activates Z axis MPG; Press cycle start key, the program continues to execute from the next command.

3.3.14 **M50** and **M51 —** Angular linkage control

- Format

  M50

  M51

- Function

M50：The angular axis linkage controls the two-axis linkage according to the set inclination angle of the angular axis and the workpiece and the grinding wheel keeps the corresponding position at Z axis direction.

M51：Cancel the angular axis linkage, X and Z axes can move independently.

3.3.15 **M97 —** Unconditional branch

- Format

  M97 P _

- Parameter item

  P — A branch to the target block number.

- Function

A branch to the target block specified by parameter P occurs, and only the blocks with M97 can be operated to avoid the endless cycle.

3.3.16 **M98 —** Subprogram call function

- Format

  M98 P _ L _

- Parameter item

  P — The file number of a subprogram.

  L — Times of calling. If L is omitted, the times of calling is defaulted as 1.

- Function

  The subprogram specified by parameter P is called for L times.

3.3.17 **M99 —** Subprogram return

- Format

  M99

- Function

  Calling the subprogram ends and the system returns to the main program.

REMARK

1. The subprogram which is called by M98 should be edited; otherwise, there exists some editing mistake.

2. M02, M30 and M99 all are end codes. If many end codes are in one program, the first end code in the executing sequence is valid while the following blocks are not valid and not executed, either. During editing, if the first end code based on the executing sequence is M99, even the block is followed by M02 or M03 end code, it is still assumed as a subprogram.

3. During using M97 or M98, pay attention to the skip process to avoid the dead cycle and recursive calling.

3.3.18 User output control

- Command

  （M16 M17） （M20 M21） （M22 M23） （M24 M25）

  （M26 M27） （M28 M29） （M46 M47） （M48 M49）

  In each bracket, it corresponds to the relative command of the same user output point.

- Format

  M__ D _

- Parameter item

  D — the pulse width of output signal. Its range is from 0 to 99.99. After omitting D, it is level output. Unit: 1s.

- Function

M16 and M17 control the state of the user output point 1;

M20 and M21 control the state of the user output point 2;

M22 and M23 control the state of the user output point 3;

M24 and M25 control the state of the user output point 4;

M26 and M27 control the state of the user output point 5;

M28 and M29 control the state of the user output point 6;

M46 and M47 control the state of the user output point 7;

M48 and M49 control the state of the user output point 8.

The digit after address M of the user output control is even number, and output controlling corresponding point is valid (the optical coupling connects); the following digits are odd number (the optical coupling disconnects). The system doesn't define the function of the user output point in details, and the user can define its function flexibly according to its requirements.

3.3.19 User input control

- Command

M81 M82 M83 M84 M85 M86 M87 M88

- Format

M__ P _

- Parameter item

P — the target block number of a branch.

Function

➢ Without parameter P

M81:The user input point 1 is valid (the optical coupling connects), and waits until the input becomes invalid.

M82: The user input point 1 is invalid (the optical coupling disconnects), and waits until the input becomes valid.

M83: The user input point 2 is valid (the optical coupling connects), and waits until the input becomes invalid.

M84: The user input point 2 is invalid (the optical coupling disconnects), and waits until the input becomes valid.

M85: The user input point 3 is valid (the optical coupling connects), and waits until the input becomes invalid.

M86: The user input point 3 is invalid (the optical coupling disconnects), and waits until the input becomes valid.

M87: The user input point 4 is valid (the optical coupling connects), and waits until the input becomes invalid.

M88: The user input point 4 is invalid (the optical coupling disconnects), and waits until the input becomes valid.

- With parameter P.

M81: When the user input point 1 is valid (the optical coupling connects), it skips to the block specified by parameter P; otherwise, it continues to execute the following blocks.

M82: When the user input point 1 is invalid (the optical coupling disconnects), it skips to the block specified by parameter P; otherwise, it continues to execute the following blocks.

M83: When the user input point 2 is valid (the optical coupling connects), it skips to the block specified by parameter P; otherwise, it continues to execute the following blocks.

M84: When the user input point 2 is invalid (the optical coupling disconnects), it skips to the block specified by parameter P; otherwise, it continues to execute the following blocks.

M85: When the user input point 3 is valid (the optical coupling connects), it skips to the block specified by parameter P; otherwise, it continues to execute the following blocks.

M86: When the user input point 3 is invalid (the optical coupling disconnects), it skips to the block specified by parameter P; otherwise, it continues to execute the following blocks.

M87: When the user input point 4 is valid (the optical coupling connects), it skips to the block specified by parameter P; otherwise, it continues to execute the following blocks.

M88: When the user input point 4 is invalid (the optical coupling disconnects), it skips to the block specified by parameter P; otherwise, it continues to execute the following blocks.

The user input control can realize the skip function. The system doesn't define the four points of input function, and the user can define its function flexibly according to the requirements.

3.4 F Function — feedrate function

- Format

  F _

- Function

  Specify the feedrate of the linear interpolation (G01). Unit: mm/min.

REMARK

The actual feedrate of the linear interpolation (G01) is controlled by F value and feedrate override: Actual feedrate= F **X** feedrate override

3.5 Function of macro variables

For the convenience of programmer to edit the movement parameter, the system provides the macro variable similar to advanced programming language. The programmer can use the macro variable during editing and then edit the digits of the macro variable in parameter mode, finally specify the movement parameter. The programmer can adjust the digits of the macro variable through trial grinding workpiece and quickly specify the movement parameter. Therefore, it improves the efficiency of programming because it doesn't need to edit the program.

- Format

Marco variable is composed of # and the following three integers, which is shown in figure 3-8:

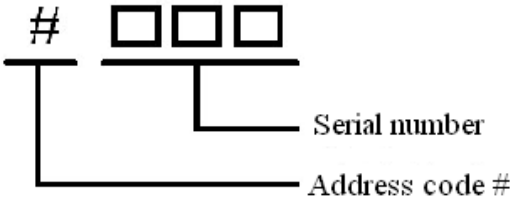

Fig. 3-10 Macro variable

- Classification

According to the data type, it is classified in two types: floating-point macro variable and integral macro variable.

Floating-point macro variable: the value is floating-point and it replaces the values of parameters *X, Z, F and D.*

Integer macro variable: the value is integer and it replaces the value of parameter *L*.

- Serial number range

  Floating-point macro variable：#001~#200

  Integer macro variable：#201~#240

- Quoting

The macro variable can not be used independently; it must follow the address code as the parameter, which is shown in the example 3-7.

Example 3-11: Quoting the macro variables.

```
N0010  G00  X#010
N0020  G01  Z#020  F#010
N0030  G04  D#030
N0040  M98  P0001  L#220
N0050  M02
```

REMARK

1. The floating-point macro variable can only replace the values of parameters X, Z, F and D, and integer macro variable can only replace the value of parameter L. Except for them, all the fields can not quote the macro variable.
2. All the macro variables are global variable and valid in the main program and its called subprograms. Any assignment to the macro variable is valid until the program ends.
3. The macro variables #001~#200 and #201~#240 can change the value on the parameter interface. And they can be quoted directly during the program running.

3.6 Macro command function

At present, the system provides two types of macro command: arithmetic operation commands and logic discriminate skip commands. The user can use the macro variable and the macro command to simplify the program, customize his or her own macro program to satisfy the special machining requirements according to the dimension of the workpiece and machining process.

3.6.1 Arithmetic operation command

Arithmetic operation commands have assignment, addition, subtraction, multiplication and division. Totally, there are 5 types of commands. The commands of addition, subtraction, multiplication and division can fully observe the regulated rules of arithmetic operation, but the operation expression only allows one type of operation, the mixed four fundamental rules operation is not allowed.

- Format

Table 3-4 Arithmetic operation macro command formats

MACRO COMMAND	FORMAT	REMARK
Assignment	# i = # j	# I must be the macro variable, # j and # k can be the macro variable or the constant.
Addition	# i = # j + # k	
Subtraction	# i = # j - # k	
Multiplication	# i = # j * # k	
Division	# i = # j / # k	

Example 3-8: macro command.

```
N0010 #010 = 10.001
N0020 #020 = #010 + 1.999
N0030 #030 = #010 * #020
N0040 #220 = #020 / 2
N0050 M02
```

3.6.2 Operator skip macro command

Logic operator skip command (IF statement) has six operator commands which are equal to, not equal to, greater than, greater than or equal to, less than and less than or equal to.

- Format

IF Conditional expression P_

- Parameter item

P — the target line number of a branch.

- Function

If the specified conditional expression is satisfied, a branch to the block of the program number specified by P occurs; otherwise, the next block is executed.

- Conditional expression

The conditional expression must include operators. And the operator is made up of two letters and inserted between two variables or between the variable and the constant for comparing the two values.

Table 3-5 Conditional expression format

OPERATOR COMMANDS	FORMAT	REMARK
Equal to	# i **EQ** # j	# i and # j can be macro variables or constants.
Not equal to	# i **NE** # j	
Greater than	# i **GT** # j	
Greater than or equal to	# i **GE** # j	
Less than	# i **LT** # j	
Less than or equal to	# i **LE** # j	

REMARK

1. When the system executes the assignment operation, firstly automatic converts the operation result into the digit type of the macro variable in the left expression and then operates the assignment.

2. The macro command operation can not detect the data overflow during operation, and the user should check the data range.

3. During editing, the system does not check the digit legitimacy of the macro variable, only during the program running, the legitimacy can be checked.

4. When use the skip function, to avoid the unnecessary mistakes, pay attention to that whether the specified block number is unique during editing, which is specified by P.

CHAPTER 4 PROGRAMMING RULES

This chapter mainly introduces some programming rules of the system, programming technique and points for attention. It helps the programmer reduce the programming mistakes and improve the programming efficiency. Before editing the program, please read it carefully.

4.1 Many commands sharing with same block

During editing, many relevant commands are in one block, which is called many commands sharing with same block. However, not all commands can share with same block because some commands have movement of mutual contradiction or same data which result in the conflicts. Moreover, some commands must be in single block.

4.1.1 Single block command

About the single block command, one block has only one command, other command and parameter are not allowed. The commands of the single block are as below:

M16, M17, M20, M21, M22, M23, M24, M25, M26, M27, M28, M29, M46, M47, M48, M49, M81, M82, M83, M84, M85, M86, M87, M88, M97, M98, M99, M40, M41, M50, M51, M70, M75, M78, M79

4.1.2 Command grouping

In order to avoid the commands in same block which causes the conflicts, the system can divide the commands into groups. And the commands in different groups can share same block, but the commands in one group can not do so. In other words, one block can have command of different groups, but the commands from one group can have only one block. About the commands of system, refer to table 4-1.

Table 4-1 Code command group

GROUP	COMMAND
1	G90，G91
2	G00，G01，G02，G03，G27，G28，G29，G30，G31，G39，G71，G94，G95
3	G04，S
4	M00，M02，M03，M05，M08，M09，M10，M11，M12，M13，M14，M15，M18，M19，M33，M35，M30

4.2 Command executing sequence in a block

If there are many commands in one block, refer to the command executing sequence table 4-2.

Table 4-2 Command execution sequence

SEQUENCE	CODE COMMAND
1	G90 and G91
2	S function
3	F function
3	M03、M08 and M12
4	G04
5	G00，G01，G02，G03，G27，G28，G29，G30，G31，G39，G71，G94，G95
7	Other M commands

Example 4-1: the command executing sequence in a block.

N0010 G90 G01 X100 F1000 G04 D2.5 M03

The executing sequence of each command in the block is shown in the table 4-3.

Table 4-3 example of command execution sequence

SEQUENCE	COMMAND
1	G90
2	M03
3	G04 D2.5
4	G01 X100 F1000

4.3 Optional block skip

During debugging the machining program, some blocks which are not required to execute can be skipped. Then, it can use the function of optional block skip. In Auto mode, if "/" is added up at the beginning of a block, the block is invalid and not executed for shielding, which is shown in example 4-2. If it is required to execute the block again, delete "/" which is before the block. Then, it can avoid repeating the deleting and inputting block, and then improve efficiency of programming.

Example 4-2 Optional block skip

N0010 G90
N0020 G01 X100 F2000 M03
/N0030 G01 X210 F1000 (This block is shielded and won't be executed.)
N0040 M30

4.4 Usage of mode commands

Mode command has maintaining function. After inputting, if the following block continues to use the instruction, then no need to input the command again and input the following parameter directly. Regarding to the mode command of system, refer to chapter 3.1. In table 4-4, the left program can be simplified to the right program, and the function of two programs are exactly same.

Table 4-4 Usage of modal code instruction

INPUT COMMAND COMPLETELY	OMITTED MODE COMMAND
N0000 G90	**N0000 G90**
N0010 G28	**N0010 G28**
N0020 G29	**N0020 G29**
N0030 G00 Z-100	**N0030 G00 Z-100**
N0040 G00 X100	**N0040 X100**
N0050 G01 X110 F1000	**N0050 G01 X110 F1000**
N0060 G01 X120 F1000	**N0060 X120**
N0070 G01 Z-100.005 F1000	**N0070 Z-100.005**
N0080 M30	**N0080 M30**

CHAPTER 5 COMPREHENSIVE PROGRAMMING EXAMPLES

Example 5-1: the workpiece is shown in the machining figure 5-1. The diameter of the workpiece step to be machined is 40mm, the length is 60mm, and the grinding surplus of the semi-finished products is 0.05mm.

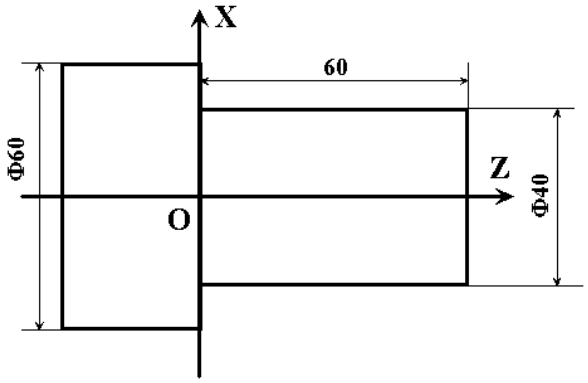

Fig. 5-1 Part diagram

- Machining process:

It divides into three processes: roughing, finishing and grinding free of the feeding grind. When the grinding wheel is out of the face at the right side of the workpiece, the grinding wheel feeds one time at Z axis direction. After grinding one layer of surplus in the machined part of the workpiece, the grinding wheel feeds one time at X axis direction until the entire surplus is grinded.

- Process parameter

  - Roughing：

  Total amount of grinding: 0.050mm

  Times of grinding: 5 times

  Feedrate of X axis each time: 0.010mm

  Feedrate of Z axis each time: 60mm

  - Finishing：

  Total amount of grinding: 0.004mm

  Times of grinding: 2 times

  Feedrate of X axis each time: 0.002mm

  Feedrate of Z axis each time: 60mm

  - Grinding: 100%

  Total amount of grinding: 0mm

  Times of grinding: Two times

  Feedrate of X axis each time: 0mm

  Feedrate of X axis each time: 60mm

- Editing a machining program
  - Workpiece coordinate: Set the axial line Z 0 and the step face as X 0. Create the coordinate system in figure 5-1 and use diameter programming method.
  - Program (A) Programming in blocks:

SUBPROGRAM OF ROUGHING	
%01	
N0000 G91	Relative coordinate programming
N0010 G00 X#001	Roughing feed (#001 = -0.010)
N0020 G01 Z#002 F#011	Z axis grinding in negative stroke (#002 = -61 , #011 = 10)
N0030 Z#003	Z axis grinding in positive stroke (#003 = 61)
N0030 M99	Subprogram return
SUBPROGRAM OF FINISHING	
%02	
N0000 G91	Relative coordinate programming
N0010 G00 X#010	Finishing feed
N0020 G01 Z#002 F#011	Z axis grinding in negative stroke (#002 = -61 , #011 = 10)
N0030 Z#003	Z axis grinding in positive stroke (#003 = 61)
N0030 M99	Subprogram return
SUBPROGRAM OF GRINDING	
%03	
N0000 G91	Relative coordinate programming
N0020 G01 Z#002 F#011	Z axis grinding in negative stroke (#002 = -61 , #011 = 10)
N0030 Z#003	Z axis grinding in positive stroke (#003 = 61)
N0030 M99	Subprogram return
MAIN PROGRAM	
%10	
N0000 G90	Absolute programming
N0010 G28	Return to X axis reference position

N0020 G29	Return to Z axis reference position
N0030 M03	Switch on spindle of grinding wheel
N0040 M14	Switch on spindle of hydraulic pressure
N0050 G00 Z#020	Rapid position on which Z axis begins grinding (#020 = 61)
N0060 X#021	Rapid position on which X axis begins grinding (#021 = 40.054)
N0070 M08	Switch on the cooling
N0080 M98 P0001 L#210	Roughing (#210= 5)
N0090 M98 P0002 L#211	Finishing (#211 = 2)
N0100 M98 P0003 L#212	Grinding (#212 = 2)
N0110 G28	Return to X axis reference position
N0120 G29	Return to Z axis reference position
N0130 M15	Switch off spindle
N0140 M30	Program end, stop the grinding wheel spindle and switch off the cooling.

- Table of macro variables

MACRO VARIABLE	VALUE	INTRODUCTION
#001	-0.010	Roughing feed
#002	-61	Z axis grinding in negative stroke
#003	61	Z axis grinding in positive stroke
#010	-0.002	Finishing feed
#011	10	Feedrate of Z axis grinding
#020	61	Position on which Z axis starts grinding
#021	40.054	Position on which X axis starts grinding
…	…	…
#211	5	Times of roughing
#212	2	Times of finishing
#213	2	Times of grinding

REMARK

In the example, it uses a lot of macro variables, and the user can adjust the value of macro variable according to the actual machining until the qualified workpiece is completed, so the repeated rewriting program can be avoided. If the process is complete correct, it doesn't require using the macro variable, the value is input directly, but the machining program is lack of flexibility. The programmer can use the macro variable according to its requirement.

- Program (B) Programming with the arithmetic skip function of macro definition:

MAIN PROGRAM	
%00	
N0000 G90	Absolute programming
N0010 G28	Return to X axis reference position
N0020 G29	Return to Z axis reference position
N0030 M03	Switch on spindle of grinding wheel
N0040 M14	Switch on hydraulic pressure
N0050 G00 Z61	Rapidly position on which Z axis starts grinding
N0060 G00 X40.1	Rapidly position on which X axis starts grinding
N0070 M08	Switch on cooling
N0080 M40	Switch on X MPG (dwell or the grinding wheel positions on the sparking place)
N0090 G39 X#001	Assign #001 to the present X axis coordinate (the grinding wheel position value)
N0100 #003 = #001- #002	Starting position of grinding=current position value －feedrate (roughing)
N0110 IF #003 LE #004 P0160	Compare the grinding position with the set value of the grinding surplus, if the condition is satisfied, a branch occurs.
N0120 G01 X#003 F10	Position which X axis starts grinding
N0130 Z0 F100	Z axis grinding in negative stroke
N0140 Z61	Z axis grinding in positive stroke
N0150 IF #003 GT #004 P0090	Compare the grinding position with the set value of grinding surplus, if the condition is satisfied, a branch occurs.

N0160 #006 = #001 - #005	Grinding starting position=current position value－feedrate (finishing)
N0170 G01 X#006 F10	X axis starting grinding position
N0180 Z0 F100	Z axis grinding in negative stroke
N0190 Z61	Z axis grinding in positive stroke
N0200 IF #006 GT #007 P0090	Compare the grinding position with the set value of grinding surplus, if the condition is satisfied, a branch occurs.
N0210 M98 P0005 L#201	Call the grinding subprogram
N0220 M30	Program end, stop the spindle of the grinding wheel and switch off the cooling.
Subprogram of grinding	
%05	
N0000 G01 Z0 F#008	Z axis grinding in negative stroke
N0010 Z61	Z axis grinding in positive stroke
N0020 M99	Subprogram return

- Macro variable table

MACRO VARIABLE	VALUE	EXPLANATION
#001		Current coordinate value
#002	0.010	Roughing feedrate
#003		Current grinding position of roughing
#004	40.010	Set value of roughing surplus
#005	0.001	Feedrate of finishing
#006		Current grinding position of finishing
#007	40.000	Set value of finishing surplus (workpiece required dimension)
#008	500	Grinding feedrate
…	…	…
#201	3	Times of grinding

REMARK

1. In program (B), it uses the conditional branch in the arithmetic operation of macro definition. Comparing with program (A), mistakes can be avoided in the defined programming in blocks, calling subprograms and the accurate grinding times, and the mistakes can be caused by the workpiece dimension and the grinding start point.

Through the macro command, the dimension is set based on our requirement and the system automatically machines the required dimension and omits the grinding times.

2. In the macro variable table, the defined macro variable is not assigned, the value is automatic assigned by the system, and the user doesn't need to input.

3. In program (B), other values don't use the macro variable. For the convenience of understanding, in the actual application, the macro variable can be set as that in program (A) to improve the flexibility of a program.

SECTION Ⅲ PLC PROGRAMMING

Introduce the command formula of user PLC program and address definition in GSK928GA/GE system.

(PLC program GSK928G CNC system of the grinding machine can be taken as reference.)

CHAPTER 1 OVERVIEW

GSK928GE/GA (hereinafter referred to as GSK928G) the embedded programmable controller of grinding machine CNC system (hereinafter referred to as PLC) is designed according to IEC1131-1 *The Programming Software Standard of Programmable Controller* which was issued by IEC in 1992.

PLC uses Command List (IL) for programming. Among them, there are 12 basic commands, 4 functional commands of timer and counter. The command structure is very simple, easy operation, and the number of command is very less, which is mainly toward the grinding machine CNC system I/O, and designed based on simple logic controlling. The embedded PLC system can edit through commands and control the machine input and output parts flexibly.

Embedded GSK928G CNC system of PLC module can directly edit PLC program in the operation panel of CNC system, and transmit the program through serial ports. Users can save the edited program, and then PLC program can be restored after changing incorrectly. The reading and writing PLC program is managed by system parameter, refer to parameter 1. Users can input the corresponding authority code in the "parameter 1", and PLC program is allowed to operate.

1.1 Specification of software PLC

The specification of GSK928G PLC is as below:

SPECIFICATION	GSK928G PLC
Program language	Command sequence (list of commands)
Program mode	Users input through keypad (the right to use is protected by code of authority)
Program progression	1
Program executing cycle	10ms
Average process time of basic commands	3μs
Program capacity	500 steps
Commands	Basic command + function command
Inner relay (R) Timer （T） Counter （C）	8 bytes (8*8 nos) 1 byte (8 nos) 1 byte (8 nos)
I/O module （X） （Y）	 4 bytes (32 logics) 3 bytes (24 logics)

1.2 Editing and debugging PLC program

1.2.1 Distributing interface

Embedded interface definition of PLC system is basically fixed, only small part can be changed or user defined. About the interface definition, refer to the third chapter of address introduction.

The edited PLC commands are saved in the memorizer of CNC system with protection of power failure. It can channel into PLC actuator for execution after the system checks and specifies no mistakes each time during resetting.

1.2.2 Editing the command sequence

After defining the interface address, the control movement of machine can be shown in the command mode. The command is composed by command and address, and the command can not be lack, but some commands do not need the address. The commands edited by users can save in the memorizer in order, and after the system automatic checks and edits, the I/O logic can be executed and control input and output. If the editing has some mistakes, the system can automatic remind.

1.2.3 Debugging a sequence program

The sequence program can be debugged through the following methods：

- Testing bracket debugging

Use one testing bracket with light and key switch to replace the machine parts, and the break or close of button can represent the state of machine, also, input signal and the lights is on and off mean the status of output signal.

- Machine debugging

During debugging of actual machine, it should be processed under MDI mode. In order to prevent the unexpected situation, the precaution measures should be fully taken before debugging.

CHAPTER 2 PLC COMMAND SYSTEM

PLC system totally has 12 basic commands and 4 functional commands, with timer and counter. It uses the formula of command list for editing which is especially for GSK928G CNC system of grinding machine.

2.1 Basic commands

2.1.1 Overview

Designing the sequence program starts from editing command sequence. One block includes a command and an address which may be omitted. The users should fully understand PLC basic commands, and then the following details of functional command can be comprehended better. Therefore, the user should read the basic and functional commands carefully before editing PLC program. In this chapter, it mainly interprets the basic PLC commands. About each basic command, the following content must be understood:

Signal address

The relay coil and contacts in the ladder diagram have been assigned with an address, and the address is composed of the type, address number and digit number.

Command type

Command includes basic and functional commands. The basic command is the most common one during designing the sequence program, totally 12 types. The functional commands can simplify the complex machine control program which is simpler than the single basic command. About the introduction of functional commands, refer to the next chapter of PLC functional commands.

Memorizing the logic operation result

During executing the sequence program, the operation result can be stored in the intermediate object register. The register can move to left or right (refer to the figure 2-1), and it initializes after resetting each time. The intermediate object register is divided into 5 digits for the user to operate from ST0 to ST4. Among them, STO saves the current execution operation result, and also outputs the value of ST0 during executing the output commands WRT and WRT.NOT.

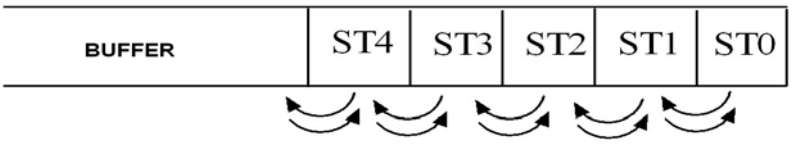

Fig. 2-1 Structure of the intermediate object register

During executing RD.STK and RD. NOT. STK, the data of intermediate object register moves to left by one digit, and save the operational result in ST0, which is shown in the figure 2-1. Similarly, when AND.STK and OR.STD are executed, the operation results of ST0 and ST1 are saved, the intermediate object register moves to right by one digit, and the operation result is saved in ST0, again.

Due to the limit of the intermediate object register which just has 5 digits. Therefore, PLC program can not move toward left or right all the time. Once it exceeds its limit, the valid data are lost. But RD.STK and RD. NOT. STK can alternative use. The valid data in the intermediate object register can not shift out of the range; otherwise, the system loses the data. About the introduction of each command, refer to the following command introduction.

2.1.2 Basic command collection

Table 2-1 is the types of basic commands and function and the following are detailed introduction.

Table 2-1 PLC basic command and its function

SR.NO	COMMAND	INTRODUCTION
1	RD	Read in specified signal value and store in ST0.
2	RD．NOT	Read in specified signal value, take the inverse value and store in ST0.
3	WRT	Output the operation result which is value of ST0, to the specified address.
4	WRT．NOT	Take the inverse value of the operation result which is value of ST0, and output to the specified address.
5	AND	Logic and multiplication calculation. Assign the logic and operation of specified signal value and current value (ST0) and store the result in ST0.
6	AND．NOT	Take the inverse value of specified signal, evaluate the logic and operation of the inverse value and value of ST0, and then save in ST0.
7	OR	Logic or addition operation. Evaluate the logic or calculation of specified signal value and value of ST0, and save the result in ST0.
8	OR．NOT	Take the inverse value of specified signal, evaluate the logic or calculation of the value of ST0, save the result in ST0.
9	RD．STK	Move the content of register toward left by one digit and save the signal value of specified address in ST0.
10	RD．NOT．STK	Similar like RD.STK, and take the inverse value of the signal in the specified address and operate as above.
11	AND．STK	Save the result of ST0 AND ST1 in ST1, stored register moves to right by one digit.
12	OR．STK	Save the result of ST0 OR ST1 in ST1, stored register moves to right by one digit.

Among them, the equivalent circuit of above PLC command which is compared with relay circuit, refer to the following table.

Table 2-2 Equivalent circuit of PLC commands

SR.NO	COMMAND NAME	INTRODUCTION
1	RD	The beginning section is normally opened contact.
2	RD．NOT	The beginning section is normally closed contact.
3	WRT	Output signal
4	WRT．NOT	Output non-signal
5	AND	Normally opened contacts and the front circuit connection in series
6	AND．NOT	Normally closed contacts and the front circuit connection in series
7	OR	Normally opened contacts and the front circuit in multiple-connection
8	OR．NOT	Normally closed contacts and the front circuit in multiple-connection
9	RD．STK	Block input (the beginning of the branch is normally opened contact)
10	RD．NOT．STK	Take the inverse value of block input and the beginning of branch is normally closed contact.
11 *	AND．STK	Block AND (serial connects with two parallel circuits)
12 *	OR．STK	Block OR (Parallel connects with two serial circuits)

Remark: command with * of blank address.

- Command of **RD**

Format

RD ¤¤.¤(Address type) (Address no) and (digit no)

Function

Read in signal value of specified address (*"1 "or "0")* and save in ST0 digit of the intermediate object register.

Method

It uses in the situation in which coding begins with normally opened contract（┤├）. About the example of RD command, refer to the ladder diagram 4.1.2—1 and corresponding commands.

Signal

The signal (contact) which is read by RD command can be signal of any coil (output) in the logic expression.

Usage example:

The example used by RD command is shown in figure 2-2;

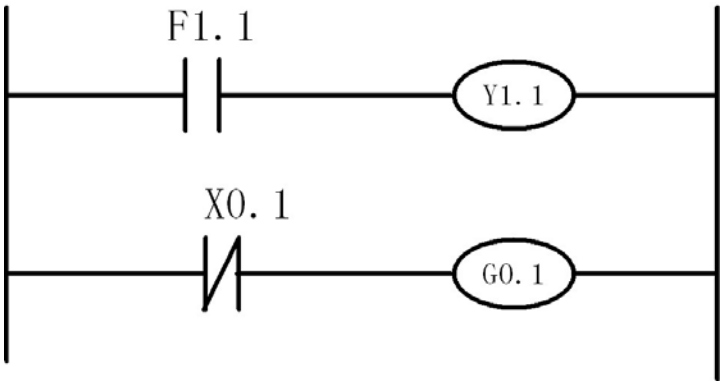

RD	F1.1
WRT	Y1.1
RD.NOT	X0.1
WRT	G0.1

Fig. 2-2 Example of RD command

- Command of **RD.NOT**

Format

RD．NOT ¤¤.¤(Address type) (Address number) (Digit number)

Function

Read in the signal value of specified address *(1 or 0)*, after taking the inverse value and save in ST0 digit of the intermediate object register.

Usage method

It uses in the situation in which coding begins with the normally closed contract（ ）. About the example of RD.NOT command, refer to the ladder diagram2—3 and the corresponding commands.

Signal

The signal (contact) which is read by RD.NOT command can be signal of any coil (output) in logic expression.

Usage example

The usage example of RD.NOT command is shown in the figure 2-3:

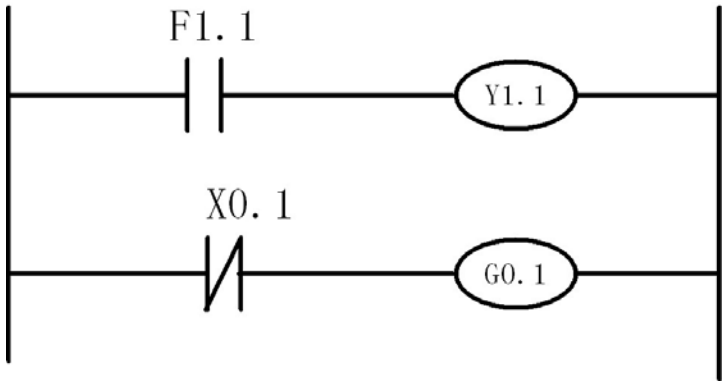

RD	F1.1
WRT	Y1.1
RD．NOT	X0.1
WRT	G0.1

Fig. 2-3 Example of RD.NOT instruction

- Command of **WRT** and **WRT.NOT**

Format

WRT ¤¤.¤(Address type) (Address number) (Digit number)

WRT．NOT ¤¤.¤(Address type) (Address number) (Digit number)

Function

Write the result of logic operation which is value of ST0 ("1" or "0") into specified address; If is WRT.NOT, then output the inverse value of ST0 (0 and 1 are mutual inverse values, same below) into the specified address.

Usage

Regarding to how to use WRT command, refer to 2—4 ladder diagram and its corresponding command.

Signal

The signal is only allowed the output relay of G, R, Y type and forbids the short-circuit output. However, just one result of logic operation is output into many addresses; refer to the following example.

Usage example The examples of WTR and WTR.NOT commands are shown in the figure 2-4:

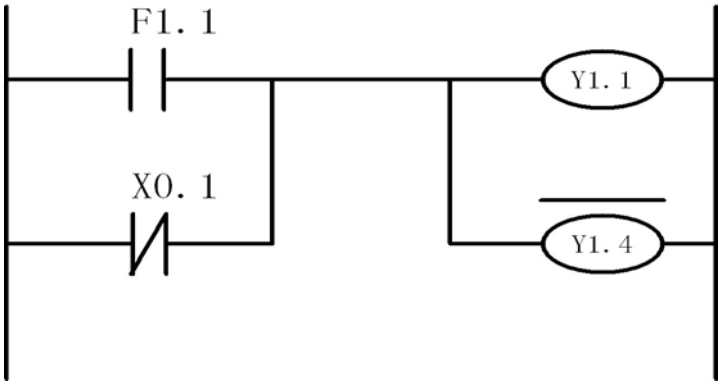

RD F1.1

OR.NOT X0.1

WRT Y1.1

WRT.NOT Y1.4

Fig. 2-4 Example of WTR and WTR.NOT commands

- Command of **AND** and **AND.NOT**

Format

AND ¤¤.¤ (Address type) (Address number) (Digit number)

AND．NOT ¤¤.¤ (Address type) (Address number) (Digit number)

Function

Put the value of specified signal AND ST0 as operation which is logic multiplication, if is AND.NOT, then take the inverse value of specified signal, and then save the operation result in ST0.

Usage

AND is used when the specified signal is normally open contact (┤├).

AND.NOT is used when the specified signal is normally closed contact (┤/├).

Usage example

About the usage example of AND and AND.NOT commands refer to the figure 2--5:

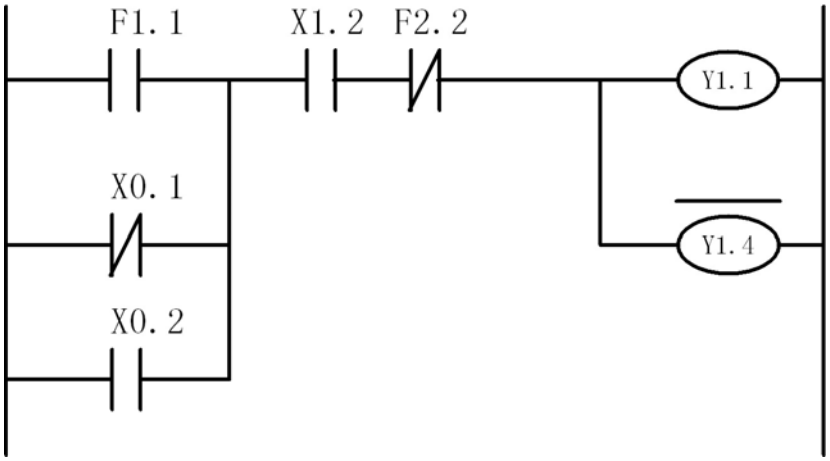

Fig. 2-5 Example of AND, AND.NOT, OR, OR.NOT commands

The logic is expressed by command and shown in the figure:

RD	**F1.1**
OR.NOT	**X0.1**
OR	**X0.2**
AND	**X1.2**
AND.NOT	**F2.2**
WRT	**Y1.1**
WRT.NOT	**Y1.4**

- Command of **OR** and **OR.NOT**

Format

OR ¤¤.¤(Address type) (Address number) (Digit number)

OR. NOT ¤¤.¤(Address type) (Address number) (Digit number)

Function

OR takes the value of specified signal OR ST0 logically which is logic addition, if it is OR.NOT, the inverse value of the specified signal is taken and the operation result in ST0 is saved.

Usage

Explore OR when the specified signal is normally open contact ( ).

Explore OR.NOT when the specified signal is normally closed contact ( ).

Usage example

Regarding to the usage example of OR and OR.NOT commands, refer to the figure 2-5.

- Commands of **RD.STK** and **RD.NOT.STK**

Format

RD.STK ¤¤.¤(Address type) (Address number) (Digit number)

RD.NOT.STK ¤¤.¤(Address type) (Address number) (Digit number)

Function

RD.STK saves the operation results in the intermediate object register, but it can not replace the original data. Move the content of register to left by 1 digit, and then the signal value of the specified address is saved in ST0 digit in the intermediate register. If it is RD.STK.NOT, the inverse value is used.

Usage

It is called the block input when the two signals begin to use the combined logic of circuit block.

RD.STK is used when the specified signal is normally open contact (┤├).

RD. NOT.STK is used when the specified signal is normally closed contact (┤/├).

Usage example

The example of RD.STK and RD.NOT.STD commands is shown in the figure 2-6:

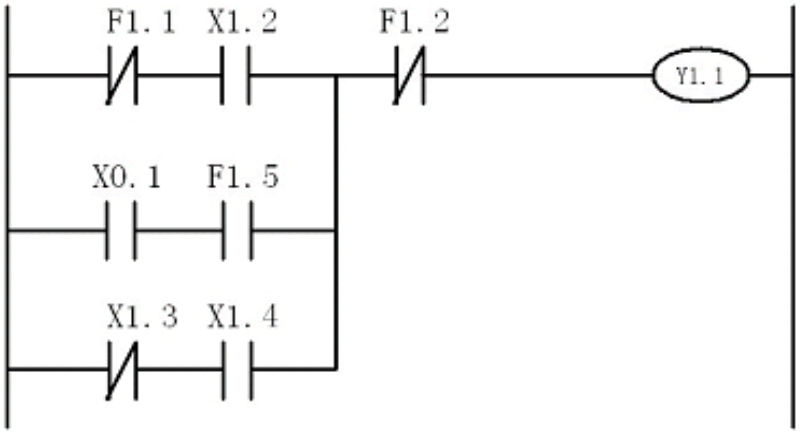

Fig. 2-6 the logic diagram of RD.STK and RD.NOT.STK commands

The logic command expression is shown in figure 2-6:

RD.NOT F1.1 // Take the inverse value of F1.1 signal and read in ST0

AND X1.2 // Read in X1.2, AND ST0, and save the result in ST0

RD.STK X0.1 // The intermediate result register moves one digit to left and the system reads in from X0.1 to ST0.

AND F1.5 // Read in F1.5, AND ST0, and save the result in ST0.

OR.STK // ST0 OR with ST1, save the result in ST1, and the intermediate result register moves to right by one digit.

RD.NOT.STK X1.3 // The intermediate object register moves one digit to left, and the system takes the inverse value of X1.3, and then reads in ST0.

AND X1.4 // Read in X1.4, AND ST0, and save the result in ST0.

```
OR.STK          // ST0 OR with ST1, save in ST1, the intermediate result register moves
                   to right by one digit.
AND.NOT   F1.2  // Read in F1.2 AND with ST0, save in ST0.
WRT       Y1.1  // Write the value of ST0 into the address Y1.1
```

If the fifth statement of OR.STK is inserted into the position of the eighth statement, the operation result of all branches is saved, and finally "OR operation" is conducted, and the results are same. However, during executing RD.STK and RD.STK.NOT commands, the intermediate result register should move to left, and then read in the data of ST0. If the parallel branch are too many which is shown in the figure 2-6, the data are missed after the register moves to left more than 4 times.

Therefore, normally, this editing mode doesn't be adopted, and the mode which is shown as above is frequently employed. After completing each branch, firstly process "OR operation", and calculate the next branch. Then, during programming, the user doesn't need to consider that parallel branches or series branches too much and avoid the programming mistakes.

- Command of **AND.STK** and **OR.STK**

Format

AND.STK

OR.STK

Remark: The two commands don't need the operational command with address.

Function

AND.STK

The value of ST0 AND (logic multiplication) that of ST1, the operation result is saved in ST1. The stacked register moves to right by one digit and the result is moved to ST0.

OR.STK

The value of ST0 OR (logic addition) that of ST1, the operation results are saved in ST1. The stacked register moves to right by one digit, and the result moves to ST0.

Usage

The two commands should use with block input command and combine with the complex circuit interface, among them:

AND.STK connects with two circuit blocks in serial;

OR.STK connects with the block circuit of two groups in parallel.

Usage example

The example of AND.STK and OR.STK commands are shown in the figure 2-7:

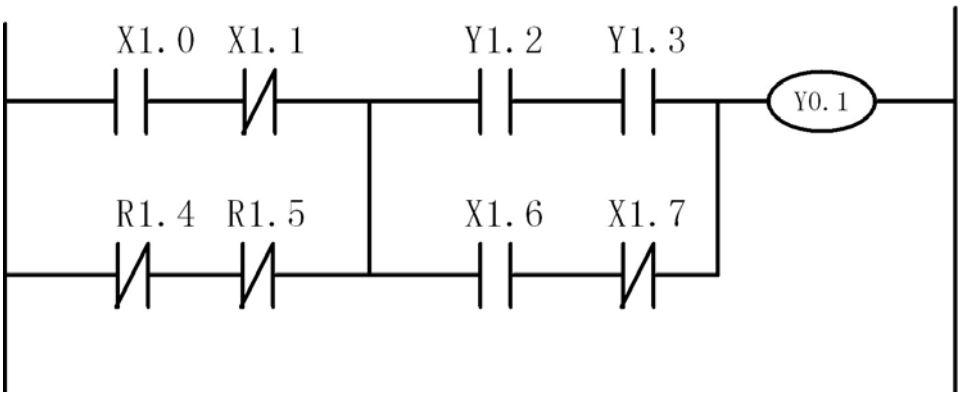

Fig. 2-7 the logic diagram of AND.STK and OR.STK commands

The logic command expressions which are shown in figure 2-7:

RD	**X1.0**	
AND.NOT	**X1.1**	// calculate parallel branches result
RD.NOT.STK	**R1.4**	
AND.NOT	**R1.5**	// calculate parallel branches result
OR.STK		// calculate parallel result (serial branch 1)
RD.STK	**Y1.2**	
AND	**Y1.3**	// calculate parallel branch result
RD.STK	**X1.6**	
AND.NOT	**X1.7**	// calculate parallel branch result
OR.STK		// calculate parallel result (serial branch 2)
AND.STK		// calculate result of two serial branches
WRT	**Y0.1**	// output the last "serial result"

In the above example, OR.STK of the fifth statement is inserted between the 7th and the 8th statement, and the result is same. However, during coding, it is very easy to make mistakes when use OR.STK and AND.STK continuously. From the functional module which is composed of command series, which is shown that:

1) AND.STD and OR.STK commands can only occur after RD.STK and RD.STK.NOT, and they must be in pairs. Any block operation must correspond to block input operation; otherwise, PLC regards it as fault.

2) RD.STK or RD.STK.NOT block input command should use with AND.STK or OR.STK block operation commands. Before outputting WRT command, the left and the right are in pairs exactly (offset); Otherwise, PLC assumes it as a mistake;

3) Because the intermediate object register has limit, only provides 5 digits for users. If RD.STK and RD.STK.NOT commands use continuously more than 4 times without AND.STK or OR.STK, the register misses the data, PLC grammar checking prompts as fault.

2.2 Function commands

The function and using method is introduced in the last chapters and these commands can introduce the most logic related to machine. But about some special control, it requires the special commands to realize the control, such as, dwell and calculating. Some functional commands are introduced to complete these control. About the formula and usage of instruction, they are introduced one by one.

- Command of **TMR**

Format

ACT statements （basic command sequence + address）

TMR T00¤ （Timer serial number）

¤¤¤ (Timer preset value)

Remark: It requires there are stacked commands before this command, which is shown in the first statement of format, followed by # command statement, which is shown in the second statement of format.

Function

The timer is dwell connection timer of fixed time, once it is written in, and then it can not be rewritten until change the initial value of command # in the sequence program. When ACT conditions are established, the specified calculator is started, after preset time, the calculator set 1 and timer T00¤ circuit is on.

The commands which use timer for timing can read 1 from the address of timer, and then control the output of any relay. During the process of timing, if ACT conditions are not established, the status of timer is 0 and timer TOO ¤ circuit is off, please input the initialization value again.

Control conditions

There must be the command of ST0 in ACT statements. If it is lack of ACT, the system assumes it as the logic mistake.

If ST0=0, the timer is off and loads the preset value again;

If ST0=1, the timer starts, and timing decreases by degrees.

Usage example of TMR command

The example about how to use timer is shown in the figure 2-8:

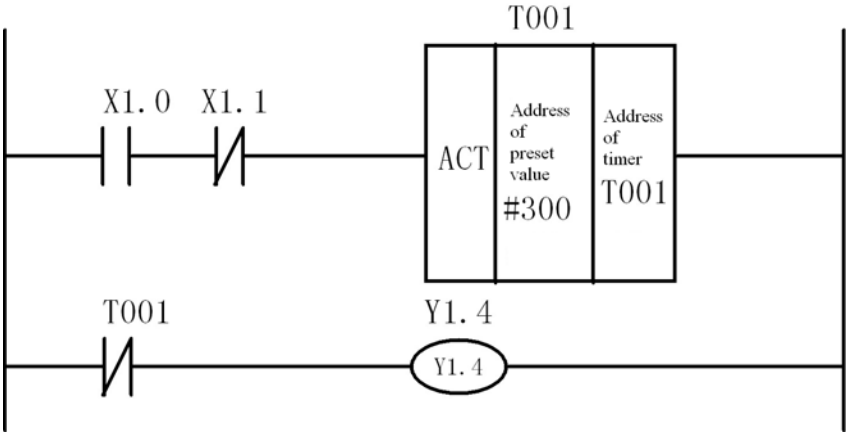

Fig. 2-7 Logic diagram of TMR instruction

The logic command expressions is shown in figure 2-8

RD	**X1.0**	// read in X1.0, save in ST0
AND.NOT	**X1.1**	// Take the inverse value X1.1, AND with ST0, the result saves in ST0.
TMR	**T001**	// If ST0 is 1, start the timer and begins to time. If the set time is up, connect the timer circuit; if ST0 is 0, the timer resets and cut off the circuit of timer.
#	**300(Unit：0.01S)**	// Preset time 3S
RD.NOT	T001	// Save the status of normally closed contact T001 in ST0
WRT	**Y1.4**	// Output ST0 data to Y1.4

Above examples: connect output circuit Y1.4, if the conditions of X1.0 and X1.1 are satisfied, please start time recorder T001; the time of timer is up after 3 seconds, and normally closed contact.

T001 breaks down and output circuit Y1.4 cuts off.

- Command of **CTR**

Format

RST statements (basic command sequence + address)

ACT statements (basic command sequence + address)

CTR C00¤ （Counter serial number）

¤¤¤ (Counter preset value)

Remark: The command should follow resetting and counting commands. As the first and second statements show, it should follow "#" command statement, which is shown as the second statement.

Function:

The counter is the fixed one to counter the values, once the preset value is written in, and then it can not be rewritten until change the initial value of "#" command in the sequence program. When the

resetting statement RST=0; ACT passes pulse each time, the preset value of calculator reduces 1. After passing the pulse of preset value, the status of counter sets 1, and the circuit of counter is on. Then, the counting command which uses the counter can read 1 from the address of counter, and then control output in any relay. During the process, if RST is skipped to 1, then the counter is reset and the counting pulse is initialized.

Control conditions

RST statements

RST=0, it begins to count the pulse which is provided by ACT.

RST=1, the counter resets, the status is 0 and loads the initialization again.

ACT statements can provide the pulses which can be counted, and they are counted on the rising edge of ACT signal. The cycle of ACT signal can not be less than 20ms; otherwise, the pulse gets lost.

RST and ACT statements are assumed as the control condition, the result of RST is saved in ST1 and that of ACT in ST0. During executing CTR statements, they are called separately. Therefore, the sequences should be specified and can not be omitted, and the redundant statement should not exist; Otherwise, PLC assumes them as logic mistakes.

Example of CTR command

The example of counter output is shown in figure 2-9:

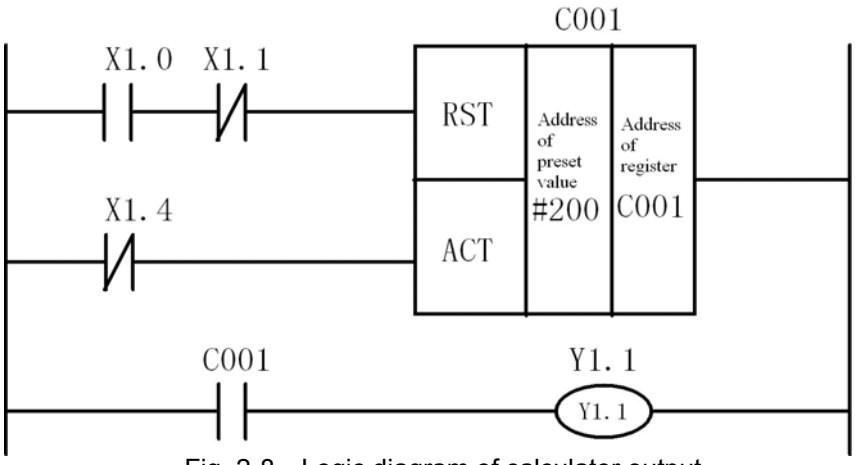

Fig. 2-8 Logic diagram of calculator output

The logic command expressions are shown as figure 2-9:

RD	**X1.0**	
AND.NOT	**X1.1**	// RST statements: save in ST0, which is for judging the resetting conditions
RD.NOT.STK	**X1.4**	// ACT statements: the intermediate result register is moved to left, the result is saved in ST0 for counting pulse.
CTR	**C001**	// Statements of a calculator
#	**200**	// Statements of a preset value

RD	**C001**	// Monitor statements
WRT	**Y1.1**	// Output statements

About the above example, if X1.0 and X1.1 make the resetting point as 1, the resetting counter is C001; if it is 0, check ACT port X1.4, and reduce the number on its rising edge, the counter completes counting after 200 pulses. Normally open contact C001 is closed and connects the output circuit Y1.1.

As the above command sequence, execute RST statements and save result in ST0;

Continue to execute ACT statements, move the intermediate result register one digit (save the data of ST0 in ST1, and ST0 is void), finally save the executing result of ACT in ST0;

Execute the command of CTR counter, judge ST1, namely, it is RST condition; If it is 1, reset the counter without any conditions, and the output status of the circuit is 0, the value of counter is initialized; if it is 0, the counter checks ST0 data and reduces the number on ST0 rising edge until the value of counter is 0. Then, the counting is completed; the circuit output of the counter is set as 1;

The output status of the circuit is held until reset or the system is switched on, again to reset.

- **Command #**

Format

¤¤¤（Preset value）

Remark: the command can only use in one statement followed by command of TMR and CTR. It is just the attached command of the two above commands and it is not allowed to use independently, otherwise, the mistake may occur.

Function

Provide preset value for timer or counter.

Usage example

Refer to the practical examples of TMR and CTR.

- Command of **END**

Format

END does not bring address or it's with address blank

Function

It means PLC program completes, the system doesn't process the program after END. It can not be ignored; otherwise, PLC alarms during checking the grammar.

CHAPTER 3 FILE MANAGEMENT of PLC USER PROGRAM

Change in any PLC program is valid after resetting system.

During editing, PLC program is saved in CNC system memory with the protection of power failure. When user needs to modify the logic control, or the memory loses the data during power failure, then PLC user program should be modified or initialized.

In order to guarantee safer and more convenient to use PLC, PLC user program file is managed as below:

3.1 User authority code management

In order to protect the information of user and safety of operation, the system has grade restriction for the users' authority of operator, and the user of different grades has corresponding authority of operation. The authority of operation is unified managed by CNC system, and input the use's password through parameter setup, which is shown in the right figure. The user's password differ two levels: they are machine manufacturer or customer technical management which is allotted by manufacturer and operator. About the details of operator grade refer to the chapter about parameters of User's Manual.

The editing and modifying operation of PLC program is protected by operation authority. The user must input the user's password of machine manufacturer level, and then enter PLC program operation of following chapter. The reading and writing of PLC program is saved for operation.

PLC is divided into two interfaces: one is PLC diagnosis for PLC automatic diagnosis and display, and then the user can understand the condition of the system, therefore, it can judge the default of machine quickly, refer to GSK928G User's Manual. The other is PLC program for editing and modifying PLC program.

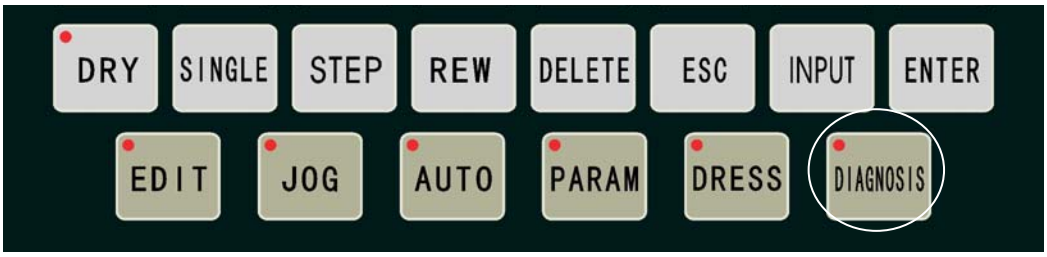

Fig. 3-1 PLC diagnosis interface

According to working mode, select 

and enter PLC diagnosis mode. Access of PLC program, serial port communication, and operation of entering PLC edit interface is operated in the interface, which is shown in the figure 3-1. While the user is trying to process PLC document, if the system found that the user's password is not correct, it shows the bright strip frame: ***The user has no right to edit!***

3.2 Editing and rewriting PLC program

The system has PLC program editor. If user needs to edit the control logic of machine, please edit on

CNC operation panel through keying to modify PLC program without any external equipment.

Press ENTER under PLC diagnosis interface which is shown in the figure 3-2. If the system checks the user's password, and after specifying the right, PLC edit interface can be entered directly, that is shown in the figure 3-2. The user can edit and rewrite PLC program in the interface. Regarding to PLC program editing and modifying, refer to the 4th chapter of PLC editing introduction.

GSK	GSK928G		PLC EDITING
NUM	INSTROUSTION	DATA	INPUT INFO
0001	RD	F0.1	RD
0002	WRT	Y0.1	
0003	END	¤¤¤	
0004	¤¤¤		
0005			
0006			
0007			
0008			
0009			
0010			
0011			
0012			

Fig. 3-2 PLC edit interface

3.3 Deleting PLC program

If the system needs to input new PLC program, PLC just enters the new-built edit interface and input the needed PLC program again.

Press DIAGNOSIS , it comes into diagnosis menu.

Press DELETE and the system check the user's password.

After specifying the right to use, then it is ready to delete PLC.

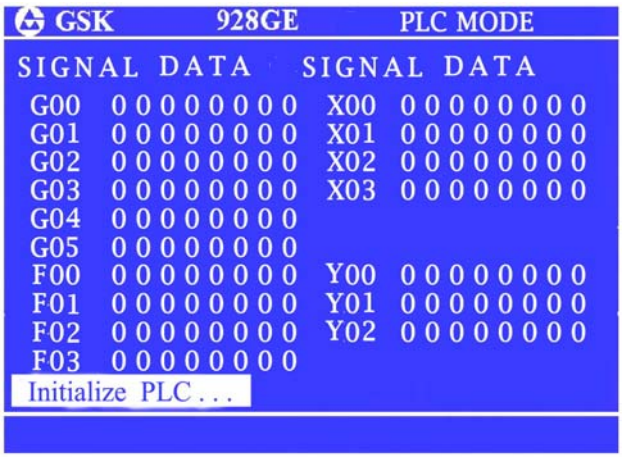

If press DELETE more than 3 seconds without releasing, then PLC is deleted. If it is less than three seconds, the above operation is canceled; the system reminds: *The user cancels PLC initialization!*

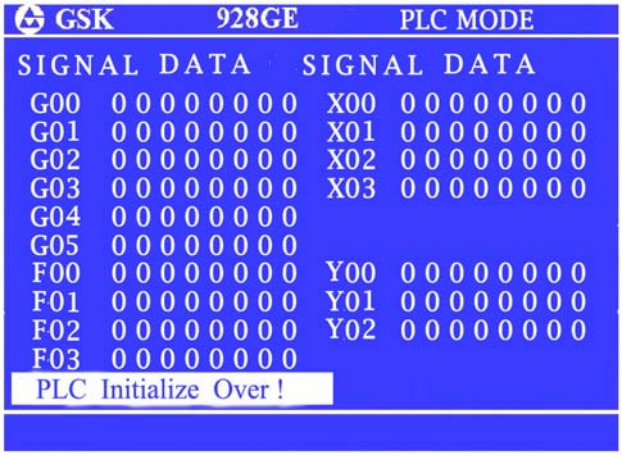

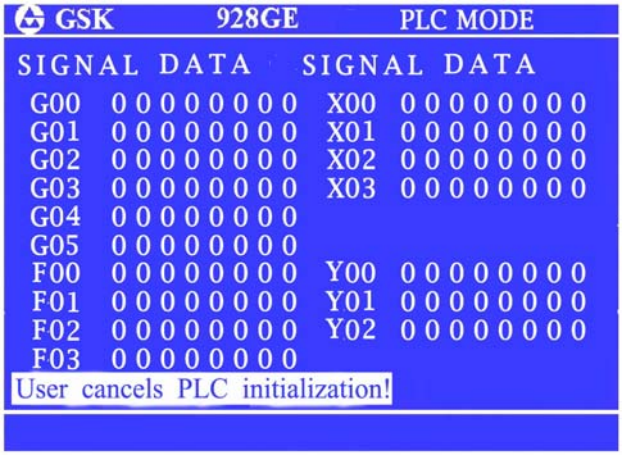

3.4 Serial transmission of PLC program

3.4.1 Outputting a program

1. The user switches 928G CNC system into user diagnosis interface,

press M R, the system reminds, which is shown in the left figure 3-3;

2. Make the computer in the status of input;

3. After the system is ready, please press ENTER and the suggestion is shown in the figure 3-4, PLC program of CNC system is sent to the external computer.

4. After completing transmission, the system remind bright strip frame: *sending prog over!* The system comes into idle condition and waits for other operations.

5. During transmission, press ESC and stop sending.

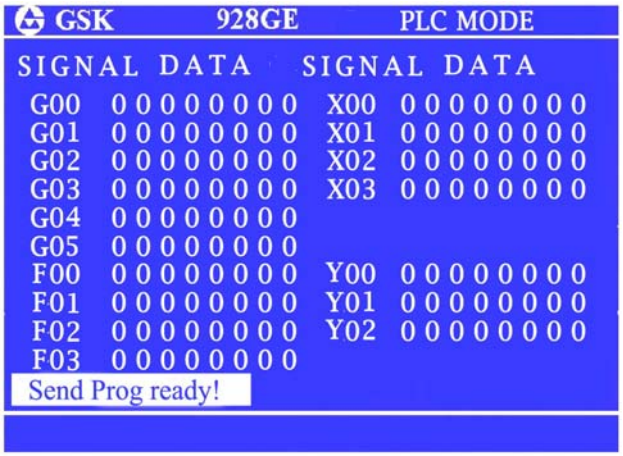

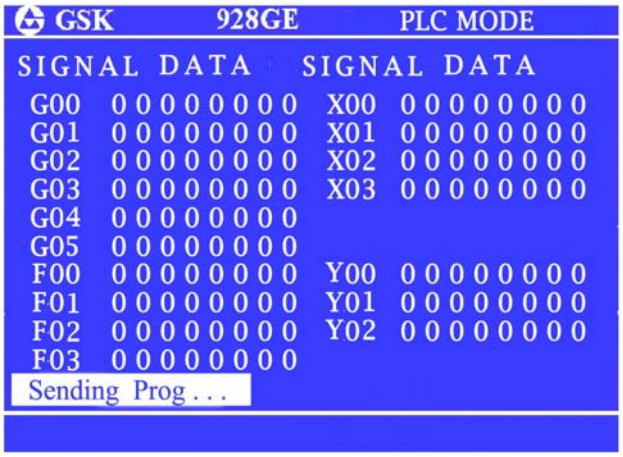

Fig. 3-3 Outputting PLC programs

3.4.2 Inputting a program

1. The user can switch 928G CNC system into user diagnosis interface, press R key, the system reminds and is shown in the left figure 3-4;

2. Make computer status of output;;

3. After specifying the system ready, press ENTER, which is shown in the right figure 3-4; and the program of external computer is transmitted to CNC system;

4. After transmission, the system reminds bright strip frame: *Receiving is over!* And system comes into PLC editing status;

5. During transmission, press ESC and stop transmitting. The system reminds through bright strip frame: *Cut off sending!* And the system comes into PLC editing status.

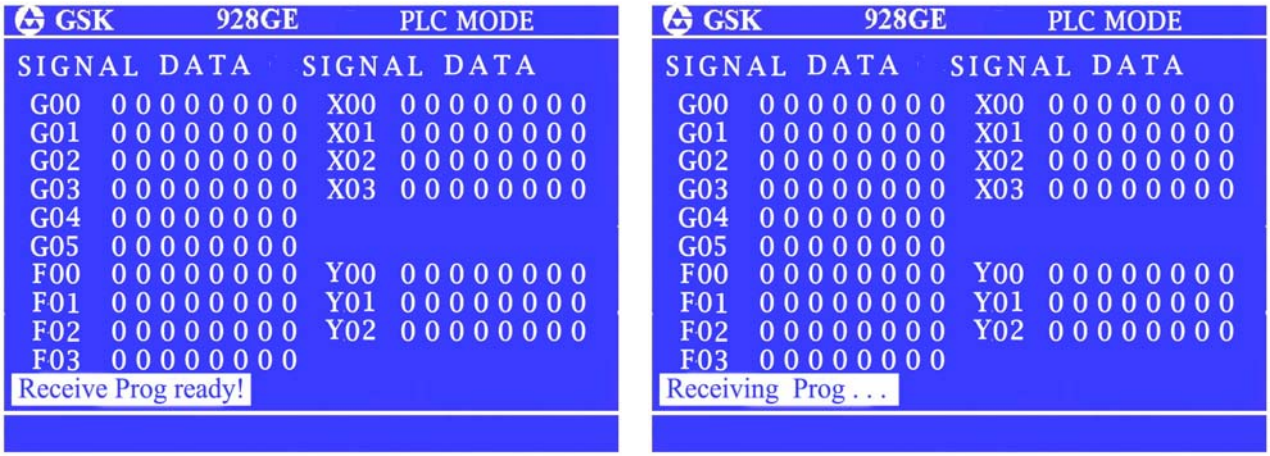

Fig. 3-4 PLC program input

REMARK

1. PLC program transmission must use the exclusive GSK928G PLC transmission software provided by GSK;

2. Concerning the usage of serial transmission software, refer to Read six document of software package.

CHAPTER 4 INTRODUCTION of EDITING PLC

This chapter mainly introduces PLC command and input method of address, some commands of inserting and deleting operation and so on. The 3.2 chapter has already introduced how to enter PLC edit interface. Right now the editing menu interface composition should be introduced. As the figure 4-1 shows, the interface body is composed of line number bar, command bar, address bar and information input bar；

Among them, the black script prompt unchangeable and is not changed according to the content of program;

The left big frame is content of PLC program, each page is no more than 12 program lines, and line number prompts independently and is automatic generated by the system without any connection with program content. The command bar and address bar prompt PLC command sequence, if it is no more than 12 lines, it prompts the blank line at the end of program; RD bright block prompts the current editing position and status, and input the command in command bar, and input the address information in the address bar. The right bar is information area input by the user, which is for displaying the commands or address information which user inputs. Before the user input the information, the command of program or address information is prompted which is shown by following table.

GSK	GSK928G		PLC EDITING
NUM	COMMAND	DATA	INPUT INFO
0001	RD	F0.1	RD
0002	WRT	Y0.1	
0003	RD.NOT	F1.2	
0004	TMR	T000	
0005	#	40	
0006	RD	T000	
0007	WRT	Y1.2	
0008	RD	F1.3	
0009	RD.STK	X1.5	
0010	AND	X1.6	
0011	AND.STK		
0012	WRT	Y0.7	

Fig. 4-1 GSK928G PLC edit menu

4.1 Input method of commands and addresses

PLC adopts command sequence program, because the command is too long, if input the command only in letter, the user should input one command or address through pressing the keys for many times, and it is very easy to press the wrong keys or make objective mistakes, the editor has been processed below:

Differ the command input status and address input status, and adopt different input command and address. After input one command or address, it automatic switches into "command input→address input" status.

Select each command to select one or some specified letters and the corresponding command is shown in the following table 4-1. Based on the initial or the key letter and combining their own meaning , take the inverse value or block input to add 'N' or 'S'. The selected command is displayed in the input info. bar. If the user selects the right command, and press *ENTER* to specify. Then, the command is written in the program and the bright area switches to address bar, and the user inputs the corresponding address. About the details of input, insert, rewriting and deleting operations, refer to the next chapter.

Rule 1 Adopt initial to select the almost command, such as *R* selects RD, and the only specialty is *D* selects RD.STK.

Rule 2 Adopt N to select the next command of current command, and the current command is RD, press *N* continuously, and then it selects the command in cycle as the next table shows *RD→RD.STK→WRT→……→END→RD*.

Rule 3 When the command is AND and OR, select AND.STK and OR.STK through *S*.

Table 4-1 command line and corresponding key

TAB	COMMAND NAME	SHORT CUT
0	NULL	default
1	RD	"R"
2	RD.NOT	"R", "N"
3	WRT	"W"
4	WRT.NOT	"W" , "N"
5	AND	"A"
6	AND.NOT	"A" , "N"
7	OR	"O"
8	OR.NOT	"O" , "N"
9	RD.STK	"D"
10	RD.NOT.STK	"D" , "N"
11	AND.STK	"A" , "S"
12	#	"#"
13	OR.STK	"O" , "S"
14	TMR	"T"
15	CTR	"C"
16	END	"E"
……	……	……

Input the address information through default mode and the illegal field can not be written in the address information bar, and only completed address constitution and the address of coincidence meaning can be saved in PLC program. If the address does not complete, the user must exit *Address input* status, then the other operations can be processed.

The address, which is mentioned in chapter 5, is composed of channel signal, the preset value of timer and counter and address blank. Because they have rules and they are very short, it is very easy to input and only the key fields are input. Regarding to the attached field like decimal point, zero between timer and counter, they are added up be system automatically. For example, like X1.1, it requires inputting only X, 1and1 in order, then the input info. bar prompts X1.1; like T003, it requires inputting T, 3 in order, the input information bar is selected T003.

The user can also input the address information to *Input info bar*, then press enter key to input the data. The system automatic checks the accuracy of data, only the intact address information, which doesn't exceed the address range, can be saved in PLC program; otherwise, the data can not be saved and forcefully switch into the command input status.

As the next table shows, only the addresses which are listed in the table are correct.

Table 4-2 PLC legal address

ADDRESS	INTRODUCTION	LEGAL ADDRESS
G	PLC→CNC(6bytes)	INT8U（G0.0~G5.7）
F	CNC→PLC(4bytes)	INT8U（F0.0~F3.7）
X	Machine→PLC(4bytes)	INT8U（X0.0~X3.7）
Y	PLC→Machine(3bytes)	INT8U（Y0.0~Y2.7）
R	Intermediate relay (8bytes)	INT8U（R0.0~R7.7）
T	Timer (000～007)	INT8U（T000~T007）
C	Counter (000～007)	INT8U（C000~C007）
NUM	Initialization of timer or counter	Address blank（0~9999）
NULL	Address blank	Address blank

When address doesn't input completely, the system is very busy, only press *exit* to cancel the data which has been input into the information bar, or press *enter* key forcefully switch into command input status and begin the other operations.

The user inputs the command or address into Input information bar to display, if the data are correct, press *enter* and save them into PLC program.

4.2 Inputting, rewriting, inserting and deleting a program line

Through the above introduction, the meaning of commands has been understood:

Command line=command + address

During editing, only command and address item is saved, and they can become an entirety to use and save. Therefore, it is no use to change any letter or figure of the command or the address, and the system allows such operation. No matter the operations of input, insert or deleting they are, the system allows such operation, too. And the minimum unit is a command or address, and the working mode is rewriting, that is to say, rewrite the command or address of current position to data in the *input info bar*.

Enter PLC editing menu for the first time, the system defaults the current input bar as command bar and prompt the first command in the other color which is opposite to the screen color, which is shown in the figure 4-1, at the same time, read in the command in the input information bar and prompt the current input value.

Here, the editing common keys in PLC should be familiar; therefore, PLC can be edited skillfully.

Editing position moves to top by one line and do not switch command or address input status, prompt it in the other color which is opposite to the screen color, and refresh input information bar. If it shows in the first line in some page and prompts when turn the page, but the key in the first line of first page is not working.

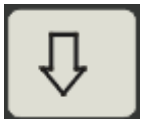

Editing position moves down by one line and don't switch the input status of command or address, prompt it in the other color which is opposite to the screen color, and refresh input information bar. If it shows in the last line in some page and prompts when turn the page, but it in the last command is not working.

Editing position moves left to the command bar, prompt it in the other color which is opposite to the screen color and prompt the command in the input info bar, but the working point is not working in the command bar.

Editing position moves right to the address bar, prompt it in the other color which is opposite to the screen color and prompt the command in the input info bar, but the working point is not working in the command bar.

Turn the page upward and do not switch command or address input status; editing position automatically returns to the first line of new page, prompt it in the other color which is opposite to the screen color, and refresh and display the input information bar, but it is not working in the first page.

Turn the page downward and do not switch command or address input status; editing position automatically returns to the first line position of new page, prompt it in the other color which is opposite to the screen color, and refresh and display the input information bar, but it is not working in the last page.

If editing position is in the address bar, delete the address and wait for inputting address; if editing position is in the command bar and delete the entire block and wait for input command.

INPUT Insert a block before the current block, the editing position automatic switches into command bar and defaults the current command as input command.

ENTER Input the command or address in the editing position, and automatic switch command and address bar, prompts in the other color which is opposite to the screen color, and refresh and display the input information bar.

ESC Cancel the address which is ready to input and wait for the user input again; or exit PLC program editing menu.

4.2.1 **Inputting and rewriting a command and an address**

As above mentioned, during editing, the rewriting method is adopted to input. Then, the command and address input and rewriting are same that is to change the commands or address in current area, no matter the position has been input by the command or address or not, into the information which the user is ready to input and which the data shown in the info bar.

1) Enter PLC editing menu, the current editing position of system is at the first line of command bar and the current editing position prompts in the color which is opposite to the screen color. Meanwhile, the command also prompts in the input info bar, which is shown in the below figure 4-2:

2) Move the editing position to the target line through pressing *DOWN*, which can not exceed the last line of program, and select the command of AND.NOT which is needed by user and prompt in the input information bar, refer to the below figure 4-3:

3) Press *ENTER*, AND.NOT command is saved in PLC program, the editing position is move to right—the address bar, and prompt the information of address bar in color which is opposite to the screen color, and remind to input the address information, then the input address is R0.2. Refer to the below figure 4-4:

4) Press *ENTER*, R0.2 is saved in PLC program, and the editing position moves to the command bar of the next line, refer to the below figure 4-5:

5) Continue the similar operation from 2) to 4), input the program of the last line, press *ESC* and exit, and complete the input PLC program.

REMARK

The process of rewriting is similar like this, only there were data in the command bar and address bar which is in the working area. Under the rewriting input mode, it is no need to differ there exist data or not.

GSK	GSK928G		PLC EDITING
NUM	COMMAND	DATA	INPUT INFO
0001	RD	X1.1	RD
0002	¤¤¤	¤¤¤	
0003			
0004			
0005			
0006			
0007			
0008			
0009			
0010			
0011			
0012			

Fig. 4-2 Prompt of PLC input block

GSK	GSK928G		PLC EDITING
NUM	COMMAND	DATA	INPUT INFO
0001	RD	X1.1	AND.NOT
0002	¤¤¤	¤¤¤	
0003			
0004			
0005			
0006			
0007			
0008			
0009			
0010			
0011			
0012			

Fig. 4-3 Prompt of input PLC block

GSK	GSK928G		PLC EDITING
NUM	COMMAND	DATA	INPUT INFO
0001	RD.NOT	X1.1	
0002	AND.NOT	¤¤¤	R0.2
0003			
0004			
0005			
0006			
0007			
0008			
0009			
0010			
0011			
0012			

Fig. 4-4 Prompt of input PLC block

GSK	GSK928G		PLC EDITING
NUM	COMMAND	DATA	INPUT INFO
0001	RD.NOT	X1.1	
0002	AND.NOT	R0.2	
0003	¤¤¤	¤¤¤	
0004			¤¤¤
0005			
0006			
0007			
0008			
0009			
0010			
0011			
0012			

Fig. 4-5 Prompt of input PLC block

4.2.2 Inserting a block

During PLC editing, a new program line is allowed to insert in the current editing position. The operational process is as below:

1) Move the editing position to the position which is required to insert through pressing *UP, DOWN*, which is shown in figure 4-6:

2) The system inserts a new program line before the above mentioned line through pressing *INPUT*. Take the command of original program line or select the command which is chosen from the input information bar as a command of new program line. During inserting operation, if the working area is in the address bar, then the command of this line is taken as that of inserting line. The command is saved in PLC program, and the address bar of new inserted line is address blank. The original program line and following program lines is moved back by one line.

3) Then, the editing position prompts the new-input command in the color which is opposite to the screen color, and refresh input information bar and prompt the command and the system waits for the user input command, it is shown in figure 4-7. About the details, refer to the input and rewriting of command and address.

GSK	GSK928G		PLC EDITING
NUM	COMMAND	DATA	INPUT INFO
0001	RD	F0.1	
0002	WRT	Y0.1	
0003	RD.NOT	F1.2	
0004	TMR	T000	
0005	#	40	
0006	RD	T000	
0007	WRT	Y1.2	
0008	RD	F1.3	RD.STK
0009	RD.STK	X1.5	
0010	AND	X1.6	
0011	AND.STK		
0012	WRT	Y0.7	

Fig. 4-6 Prompt of the insert block before operation

GSK	GSK928G		PLC EDITING
NUM	COMMAND	DATA	INPUT INFO
0001	RD	F0.1	
0002	WRT	Y0.1	
0003	RD.NOT	F1.2	
0004	TMR	T000	
0005	#	40	
0006	RD	T000	
0007	WRT	Y1.2	RD.STK
0008	RD	F1.3	
0009	RD.STK	¤¤¤	
0010	RD.STK	X1.5	
0011	AND	X1.6	
0012	AND.STK		

Fig. 4-7 Prompt of the insert block after operation

4.2.3 Deleting a command and an address

The deleting operation of one program line or address of one program line is as following, but when the command is deleted, its address is also deleted.

Deleting a program line

1) Move the working area to the line command bar which is required to delete through pressing *UP or DOWN*, which is shown in the figure 4-7;

2) Press *DEL* and delete the program line, and the next program line is moved upward. Then, sauce program line has been deleted and the system refreshes and displays this page, which is shown in the figure 4-6;

3) The system waits for the user input command data, refer to the input and rewriting of command and address.

Deleting the address of one program line

1) Move the editing position to the address which is required to delete through pressing *UP and DOWN*;

2) Press *DEL* to delete the address and the editing position remains unchanged; the system waits for new user input address, refer to the input and rewriting of commands and address.

4.3 PLC editing rules

The rules and logic relations of command and address

The chapter of command and address input method has already introduced the grammar of command and address On the one hand, because of the monitor function of editor; the user is not

easy to input one complete illegal command and address data. On the other hand, the user must abide by the following rules，then the check of PLC editor can be passed to guarantee the accuracy of PLC program.

1. Guarantee the command and address to match with each other. Otherwise, the system alarms *command and address conflict.*

When the command is RD， RD.NOT，AND，AND.NOT，OR，OR.NOT ，RD.STK and RD.NOT.STK, the address must be channel signal (G, F, R, X, Y address signal), which can not be digit or omitted.

When command is WRT or WRT.NOT, the address can only be G, R, Y channel signal.

When command is TMR or CTR, the address can only be T timer, C counter.
When command is #, the initialization of address can only be digit form 1 to 9999.

When command is AND.STK，OR.STK and END, the address can not be blank.

2. Timer and counter is taken as output of relay circuit, it is allowed to use one time, otherwise, timer and counter is used repeatedly.

3. The channel signal G, R and Y is taken as circuit output of relay, one output relay is not allowed to use repeatedly, and otherwise, *G, R and Y address circuit is output repeatedly.*

Logic relations of command

During editing PLC program, the accuracy of grammar should be guaranteed, and the logic relations between statements should be reasonable, the detailed rules are as below:

1. PLC program is completed through END instruction, and the following program line doesn't need to execute, but check their grammar. The command is regarded as the ending sign and it can not be omitted, otherwise, the system alarms *END is lack.*

2. The commands of TMR and CTR must follow with #command since # command provides the initialization; meanwhile, # command must be meaningful after TMR or CTR command, otherwise *Timer and counter is fault*.

3. Read PLC command system carefully, understand the meaning of each command and guarantee the correct logic between command sequences, otherwise, the system alarms *Command depth is fault*.

1> It allows multi-circuit output, but the short circuit output is forbidden, refer to the figure 4-8.

2> It doesn't allow multichannel output; refer to the figure 4-9.

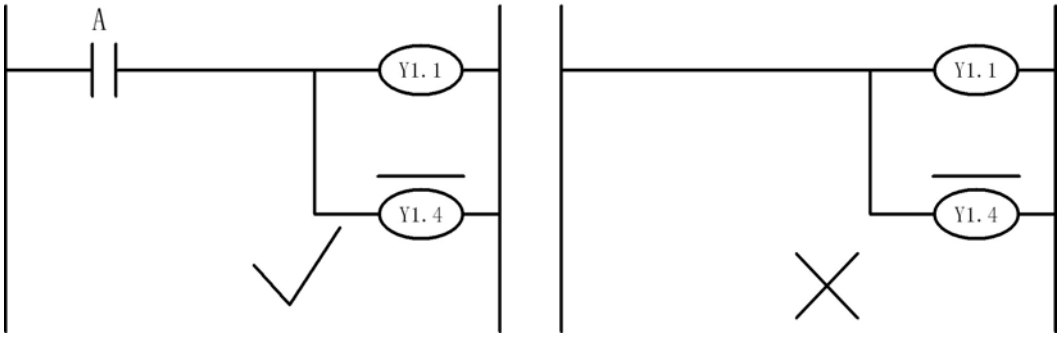

Fig. 4-8 the multichannel output is allowed, but short circuit is forbidden

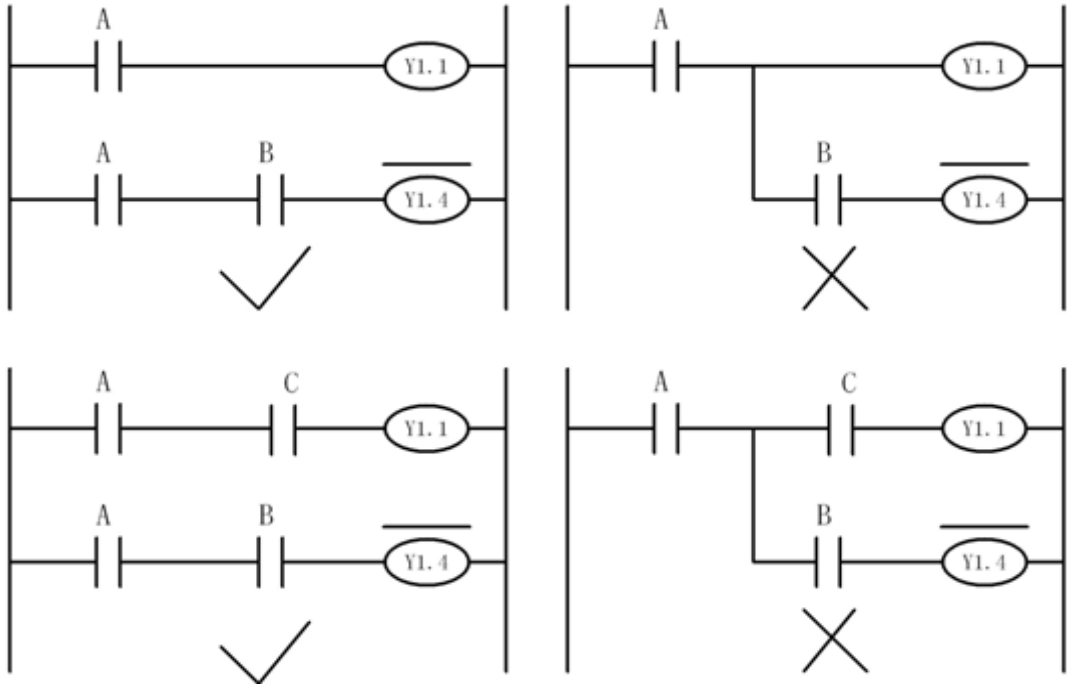

Fig. 4-9 Multi-level is not supported

3> Each output module command sequence is completed, which is shown in the figure 4-10, if the output command is ignored, PLC is assumed it as a logic mistake.

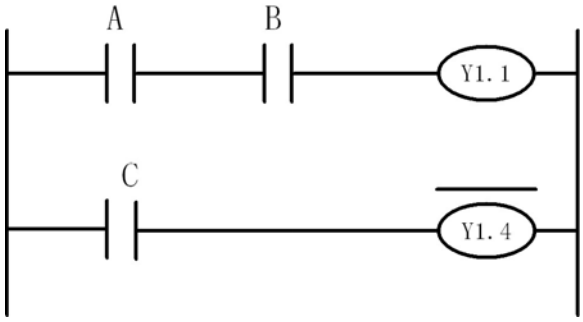

Fig. 4-10 Logic mistake output

RD A

AND B

（WRT Y1.1） //If the above line is lack, PLC is assumed it as a logic mistake.

RD C

WRT.NOT Y1.4

4.4 Process method of PLC signals

The meaning of PLC address signal value has some differences due to the level definition of machine surrounding circuit. The system standardize the meaning of address signal value for avoiding confusion and being adapt to the various external equipment and the different customs of circuit connection which is adopted by user.

1. G signal, the signal is employed when PLC passes signal to CNC side; when some signal is 1, CNC does the corresponding process according to the changing status of external equipment. For example, ESP emergency stop, program starts;

2. F signal, the signal is gained when PLC receives the signal from CNC side, each signal is 1, and CNC sends the signal of starting external equipment;

3. X signal, the signal is gained when PLC checks machine input signal. When the machine input contact switch is off, and return circuit connects, PLC takes the single as *1*;

4. Y signal, the signal is used when PLC sends signal to the machine external equipment, and each signal is *1*, the corresponding switch of machine relay switches on.

To grantee the safety of machine, during the practical usage, some input signal frequently adopts *normally closed* contact; when the contact is off, the machine responds to the signal, then the reliability is improved, such as ESP emergency stop signal and limit signal of each axis. Then, in order to guarantee the control of CNC machine, the user should pay attention to the analysis:

1. CNC system states *Declare normally closed contact*. If the user adopts *normally closed* contact to connect some signal, then the contact is off which represents the status has changed. In order to adjust logic relations, the user needs to inform the system through programming that the signal adopts *normally closed* signal to connect. For example, if the circuit is closed, and the system runs normally, however, the contact is off or the circuit has some faults, then emergency stop alarms.

PLC program statements：

```
RD.NOT      X0.3
WRT         G0.3
OR
RD          X0.3
WRT.NOT     G0.3
```

Then PLC can understand the signal correctly, and when the contact is *off,* the emergency stop alarms.

2. When normally closed contact connects circuit, because machine input connects PLC input port based on normally closed, so PLC detects the signal status always as 1. If PLC program takes the inverse value of signal and calculate, it causes the logic mistakes.

The process of example is as below:

It requires program to start signal, the program stops the external connection of signal, and control CNC program start and stop. Among them, starting signal connects X 0.1, and adopts switch of normally open contact; the program stops that the signal connects X0.2, and adopts switch of normally closed contact. G0.1 and G0.2 are separately external control information which PLC sends to CNC side.

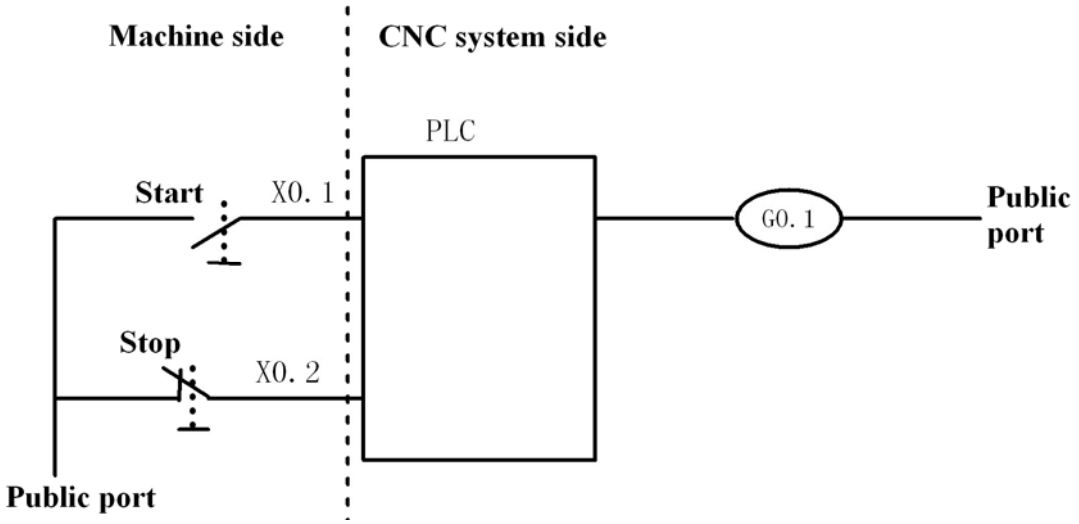

```
RD          X0.1
AND.NOT     X0.2
WRT         G0.1
RD          X0.2
WRT.NOT     G0.2
```

It is found that after pressing *start* in the above programs, the system does not start the program of running automatically, because the second statement of PLC program take the inverse value of X0.2 signal, then adopt AND calculation, which results in G0.1 output status is always 0. But stop pressing the button, CNC system finds that G0.2 is 1. Therefore, the external program starting channel can not work properly. Then, change AND.NOT X0.2 into AND X0.2, it comes back to normal situation.

4.5 PLC programming application examples

One CNC machine, the normally closed contact is used in ESP emergency stop, axis limit, program dwell, reset and driving alarm signal, and others use normally open contact. The most fundamental program is below as reference:

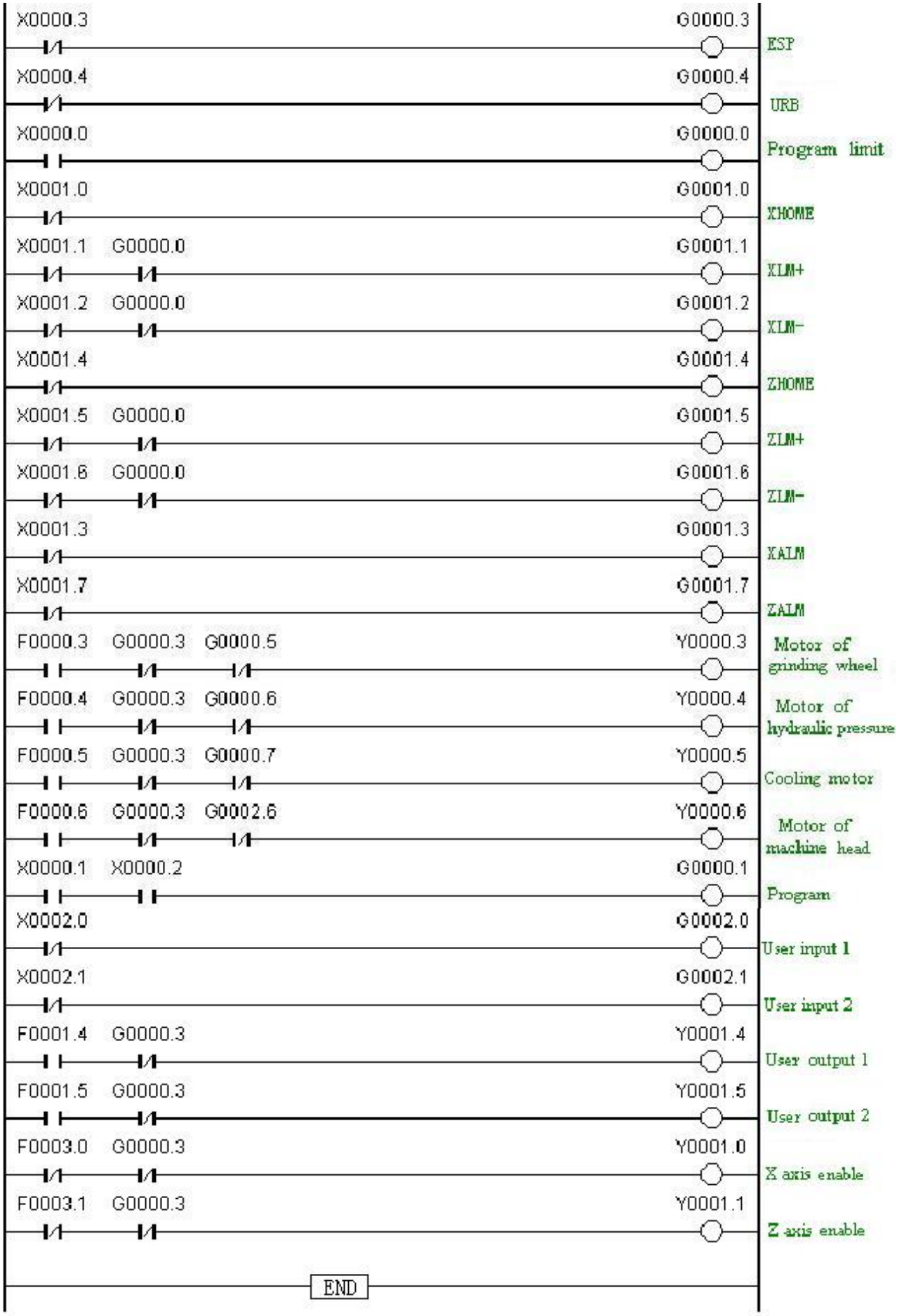
X0000.3 G0000.3 ESP
X0000.4 G0000.4 URB
X0000.0 G0000.0 Program limit
X0001.0 G0001.0 XHOME
X0001.1 G0000.0 G0001.1 XLM+
X0001.2 G0000.0 G0001.2 XLM-
X0001.4 G0001.4 ZHOME
X0001.5 G0000.0 G0001.5 ZLM+
X0001.6 G0000.0 G0001.6 ZLM-
X0001.3 G0001.3 XALM
X0001.7 G0001.7 ZALM
F0000.3 G0000.3 G0000.5 Y0000.3 Motor of grinding wheel
F0000.4 G0000.3 G0000.6 Y0000.4 Motor of hydraulic pressure
F0000.5 G0000.3 G0000.7 Y0000.5 Cooling motor
F0000.6 G0000.3 G0002.6 Y0000.6 Motor of machine head
X0000.1 X0000.2 G0000.1 Program
X0002.0 G0002.0 User input 1
X0002.1 G0002.1 User input 2
F0001.4 G0000.3 Y0001.4 User output 1
F0001.5 G0000.3 Y0001.5 User output 2
F0003.0 G0000.3 Y0001.0 X axis enable
F0003.1 G0000.3 Y0001.1 Z axis enable
END

LINE NO	COMMAND	ADDRESS	REMARK
001	RD.NOT	X0.3	Declare ESP "normally closed" contact
002	WRT	G0.3	
003	RD.NOT	X0.4	Declare URB "normally closed" contact
004	WRT	G0.4	
005	RD	X0.0	Declare program limit "normally open" contact
006	WRT	G0.0	
007	RD.NOT	X1.0	Declare XHOME "normally closed" contact
008	WRT	G1.0	
009	RD.NOT	X1.1	Declare XLIMIT + "normally closed" contact
010	AND.NOT	G0.0	
011	WRT	G1.1	
012	RD.NOT	X1.2	Declare XLIMIT—"normally closed" contact
013	AND.NOT	G0.0	
014	WRT	G1.2	
015	RD.NOT	X1.4	Declare ZHOME "normally closed" contact
016	WRT	G1.4	
017	RD.NOT	X1.5	Declare ZLIMIT + "normally closed" contact
018	AND.NOT	G0.0	
019	WRT	G1.5	
020	RD.NOT	X1.6	Declare ZLIMIT—"normally closed" contact
021	AND.NOT	G0.0	
022	WRT	G1.6	
023	RD.NOT	X1.3	Declare X axis drive alarm "normally closed" contact
024	WRT	G1.3	
025	RD.NOT	X1.7	Declare Z axis drive alarm "normally closed" contact
026	WRT	G1.7	
027	RD	F0.3	Start the spindle motor statements
028	AND.NOT	G0.3	
029	AND.NOT	X0.5	
030	WRT	Y0.3	
031	RD	F0.4	Start the hydraulic motor statements
032	AND.NOT	G0.3	
033	AND.NOT	X0.6	
034	WRT	Y0.4	
035	RD	F0.5	Start the cooling motor statements
036	AND.NOT	G0.3	
037	AND.NOT	X0.7	
038	WRT	Y0.5	

LINE NO	COMMAND	ADDRESS	REMARK
039	RD	F0.6	Start the machine-head motor statements
040	AND.NOT	G0.3	
041	AND.NOT	X2.6	
042	WRT	Y0.6	
043	RD	X0.1	Program "cycle start" statements
044	AND	X0.2	
045	WRT	G0.1	
046	RD.NOT	X0.2	Program "stop" statements
047	WRT	G0.2	
048	RD	X2.0	Declare user input 1 as "normally closed" contact
049	WRT	G2.0	
050	RD	X2.1	Declare user input 2 as "normally closed" contact
051	WRT	G2.1	
052	RD	F1.4	Declare user output 1 as " normally open" contact
053	AND.NOT	G0.3	
054	WRT	Y1.4	
055	RD	F1.5	Declare user output 2 as "normally open" contact
056	AND.NOT	G0.3	
057	WRT	Y1.5	
058	RD.NOT	F3.0	Declare X axis enable as "normally closed" contact
059	AND.NOT	G0.3	
060	WRT	Y1.0	
061	RD.NOT	F3.1	Declare Z axis enable as "normally closed" contact
062	AND.NOT	G0.3	
063	WRT	Y1.1	
064	END		
065			

REMARK

"Machine head motor" control signal belongs to 928GE external cylindrical grinding machine, which is corresponding to the control signal of "electromagnetic suction cup magnetism". And the following usage and definition, machine-head motor of 928GE corresponds to "electromagnetic suction cup magnetism" and "machine-head alarm" to "electromagnetic suction cup free of magnetism". Besides, the definition axis directions of two systems are different, the definition of GA surface grinding machine is "Y and Z axis", but the definition of GE cylindrical grinding machine is "X and Z axis", and others are universal.

CHAPTER 5 INTERFACE DISTRIBUTION and INTRODUCTION of ADDRESSES

Based on the structure of cylindrical grinding machine, GSK928G CNC system is equipped with input interfaces of 24 routes and output interfaces of 16 routes. The interfaces of input and output except some reserved singles all adopt fixed definition. In order to guarantee PLC to run smoothly, it is not allowed the user to change the definition of interface. About the details, refer to X and Y address in chapter 5.3 and 5.4. During edit PLC logic program, each single is differed by address.

Different addresses are corresponding to input and output signal in the machine side and input and output signal in CNC side, internal relay, timer and calculator. Each address is composed of address number and digit number, and the address begun with T and C only has address number.

The rules of serial number are as following:

The address serial number is composed of address type, address number and digit number.

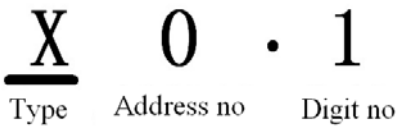

Address type: include G, F, X,Y,R,T and C; when address type is T and C, the following three digits are address number and it does not exceed 7 digits, for example, T002 represents timer T2, totally 8 timer, 8 calculator, the intermediate zero which CNC system employs to show the uniform.

Address number: the serial number of the decimal system represents one byte which is the first digit after address type;

Point: it is only for showing, when address can not omit digit, such as T000, C003, etc.

Digit number: the serial number of the octal system, 0~7 mean the bytes which represent front address number and are the digit number behind address type.

Specially, some commands are for initialization of timer and calculator, and the "address" is composed of data from 1 to 9999. Regarding to # instruction, refer to PLC function command chapter 4.2.About the specified usage method, refer to PLC editing command of the forth chapter.

Address type of GSK928G PLC is as below:

Table 5-1 PLC address distributing table

ADDRESS	ADDRESS COMMAND	LENGTH
G	PLC→CNC(6bytes)	INT8U（8 位*6）
F	CNC→PLC(4bytes)	INT8U（8 位*4）
X	Machine→PLC(3bytes)	INT8U（8 位*3）
Y	PLC→Machine(2bytes)	INT8U（8 位*2）
R	Intermediate relay(8bytes)	INT8U（8 位*8）
T	Timer (000～007)	INT8U（8 个）
C	Calculator (000～007)	INT8U（8 个）
NUM	Initialization of timer or calculator	
NULL	Address blank	

5.1 G address, PLC→NC address (G)

The address is from G0.0 to G5.7. The definition types are: INT8U (Each byte is 8 digits, same below) has 48 signals. The signal is for communication of CNC control module which is in charge of sending some machine signal and PLC process information to CNC execution module, which is processed by CNC actuator, which is shown in table 5-2, and the user can not change the signal definition.

Table 5-2 G address definition table

G ADDRESS	REMARK	G ADDRESS	REMARK
G0.0	Limit release	G1.0	X axis reset and reduce speed
G0.1	Program start	G1.1	X axis positive limit
G0.2	Program stop	G1.2	X axis negative limit
G0.3	Emergency stop	G1.3	X axis driving alarm
G0.4	Urgent moving back	G1.4	Z axis reset and reduce speed
G0.5	Grinding wheel motor overload	G1.5	Z axis positive limit
G0.6	Hydraulic motor overload	G1.6	Z axis negative limit
G0.7	Cooling motor overload	G1.7	Z axis driving alarm
G2.0	User input 1 (M81 and M82)	G3.0	User input 3 (M85 and M86)
G2.1	User input 2 (M83 and M84)	G3.1	User input 4 (M87 and M88)
G2.2	Measuring instrument port 3	G3.2	Grinding wheel adjusting position
G2.3	Measuring instrument port 4	G3.3	Spindle reset and reduce speed
G2.4	Measuring instrument port 5	G3.4	Spindle positive limit
G2.5	Measuring instrument port 6	G3.5	Spindle negative limit
G2.6	Machine-head motor overloads	G3.6	Spindle motor alarm
G2.7	Liquid level of lubricant low	G3.7	Reserved (no definition)

REMARK

G signal of PLC corresponds to X signal of machine input signal, CNC uses this kind of signal to process machine status.

5.2 F address, NC →PLC address (F)

F address is from F0.0 to F3.7. The type of definition is INT8U, totally 32 signals. The signal is for CNC control module communication and it is in charge of M code explanation and execution. F address is shown in table 5-3; user is not allowed to change the signal definition.

Table 5-3 definition table of F address

F ADDRESS	REMARK		F ADDRESS	REMARK
F0.0	Starting and stopping valve M18/M19		F1.0	(X axis enable)
F0.1	User output 1 M16/M17		F1.1	(Z axis enable)
F0.2	User output 2 M20/M21		F1.2	(X axis clamp at zero speed)
F0.3	Spindle motor M03/M05		F1.3	(Z axis clamp at zero speed)
F0.4	Hydraulic pressure motor M14/M15		F1.4	User output 3 M22/M23
F0.5	Cooling pump motor M08/M09		F1.5	User output 4 M24/M25
F0.6	Machine-head motor M12/M13		F1.6	Measuring instrument valve (radial direction) M70/M75
F0.7	Tail stock moving back control M10/M11		F1.7	Measuring instrument valve (axis direction) M78/M79
F2.0	Spindle enable		F3.0	Y axis servo overrun
F2.1	Spindle clamp at zero speed		F3.1	Z axis servo overrun
F2.2	Spindle motor （M33/M35）		F3.2	Spindle servo overrun
F2.3	User output 5 （M26/M27）		F3.3	Reserved
F2.4	User output 6 （M28/M29）		F3.4	Reserved
F2.5	User output 7 （M46/M47		F3.5	Reserved
F2.6	User output 8 （M48/M49）		F3.6	Reserved
F2.7	Reserved		F3.7	Reserved

REMARK

F signal of PLC is composed of M code translation and CNC system control mode, which is for driving Y signal to control external equipment of machine!

5.3 X address and machine→PLC address (X)

X address is from X0.0 to X 3.7. The definition type is INT8U, totally 4 bytes, 32 output routes. They are distributed in the input interface of CNC system and the interface of servo drive and the driving alarm signal is ALM. About the usage of measuring instrument, refer to the appendix.

Table 5-4 X address definition table

X ADDRESS	INTRODUCTION (only for reference)	PLC DIAGNOSIS MARK
X0.0	Limit release	ULK
X0.1	Program start	PST
X0.2	Program stop	PSP
X0.3	Emergency stop signal （ESP）	ESP
X0.4	Urgent moving back	URB
X0.5	Grinding wheel motor overload	GWM
X0.6	Hydraulic pressure motor overload	HPM
X0.7	Cooling motor overload	RM
X1.0	Signal of X axis resetting and deceleration（XHOME）	XH
X1.1	X axis positive limit signal	XLIMIT+
X1.2	X axis negative limit signal	XLIMIT－
X1.3	X axis driving alarm	ALM1
X1.4	Signal of Z axis resetting and deceleration（ZHOME）	ZH
X1.5	Z axis positive limit signal	ZLIMIT+
X1.6	Z axis negative limit signal	ZLIMIT－
X1.7	Z axis driving alarm	ALM2
X2.0	User input1(M81 and M82)	US1
X2.1	User input2(M83 and M84)	US2
X2.2	Measuring instrument port 1	SCARER1
X2.3	Measuring instrument port 2	SCARER2
X2.4	Measuring instrument port 3	SCARER3
X2.5	Measuring instrument port 4	SCARER4
X2.6	Machine-head motor overload	LHM
X2.7	Lubricant liquid level low	LOW
X3.0	User input3(M85 and M86)	US3
X3.1	User input4(M87 and M88)	US4
X3.2	Grinding wheel adjusting position	GWFP
X3.3	Signal of spindle resetting and reducing speed	PAH
X3.4	Spindle positive limit signal	PALIMIT+

X3.5	Spindle negative limit signal	PALIMIT－
X3.6	Spindle motor alarms	PAM
X3.7	Reserved (without definition)	

5.4 Y address, PLC→address of machine (Y)

Address is from Y0.0 to Y1.7. The definition type is: INT8U, totally 3 bytes, 24 output routes. They distribute in the output interface of system and interface of drive which is driving enable and clamp at zero speed.

Table 5-5 Y address distributing table

Y ADDRESS	INTRODUCTION	PLC DIAGNOSIS MARK
Y0.0	Starting/stopping valve	M18/M19
Y0.1	User output 1	M16/M17
Y0.2	User output 2	M20/M21
Y0.3	Grinding wheel motor	M03/M05
Y0.4	Hydraulic pressure motor	M14/M15
Y0.5	Cooling motor	M08/M09
Y0.6	Electromagnetic suction cup	M12/M13
Y0.7	Tail stock moving back control	M10/M11
Y1.0	Y axis enable	EN1
Y1.1	Z axis enable	EN2
Y1.2	Y axis clamp at zero speed	ZS1
Y1.3	Z axis clamp at zero speed	ZS2
Y1.4	User output 3	M22/M23
Y1.5	User output 4	M24/M25
Y1.6	Measuring instrument valve (radial direction)	M70/M75
Y1.7	Measuring instrument valve (axial direction)	M78/M79
Y2.0	Spindle enable	EN3
Y2.1	Spindle clamps at zero speed	ZS3
Y2.2	Spindle motor	M33/M35
Y2.3	User output 5	M26/M27
Y2.4	User output 6	M28/M29
Y2.5	User output 7	M45/M46
Y2.6	User output8	M47/M48
Y2.7	Reserve	

5.5 Addresses of internal relay R, timer T and counter C

Internal relay address R: the address is from R0.0 to R7.7. The type of definition is: INT8U, total 8 bytes, 64 relay addresses. The address area resets when the system is switched on.

Address T of timer: Address is from T000 to T007, and two digits of zero in the middle are added up automatically for the further extension, and the signal of timer resets too when the system is switched on.

Counter address C: The address is from C000 to C007, and two digits of zero in the middle are for further extension and can be omitted, the signal of counter resets when system is switched on.

CHAPTER 6 SEQUENCE PROGRAMS

Sequence program is edited by PLC code in the command list. The sequence program tells PLC actuator how to read in or control each I/O port of machine.

After system is switched on, it executes PLC logic regularly and refreshes external I/O port. Because the external interface of each machine is different, each machine should edit PLC sequence program independently.

6.1 Sequence program executing process

Among control circuit of common relay, each relay can completely move at the same time. In the following examples, when relay A moves and contacts B and C are closed, the relay D and E can move meanwhile. When PLC sequence controls, each relay moves in order. When relay A operates, relay D moves at first, then relay E moves, refer to figure 6-1, which each relay moves according to the sequence of ladder diagram.

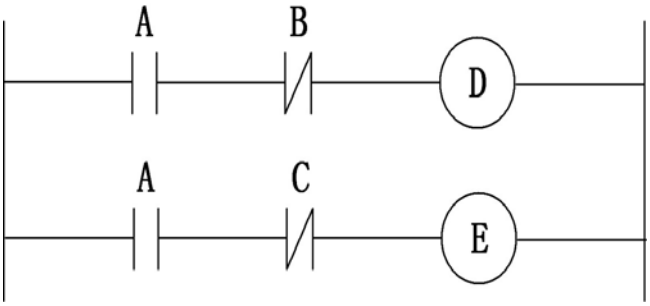

RD	A
AND.NOT	B
WRT	D
RD	A
AND.NOT	C
WRT	E

Fig. 6-1 Circuit examples

The following figures 6-2 and 6-3 point the difference between relay circuit and PLC program movement.

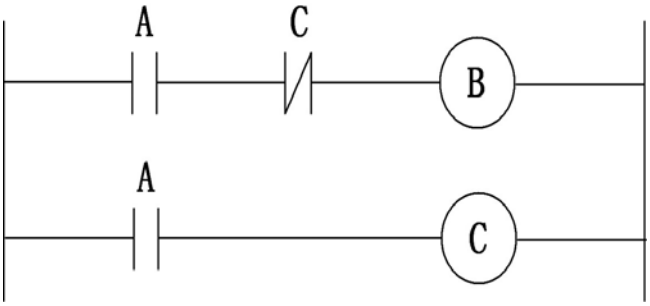

RD	A
AND.NOT	C
WRT	B
RD	A
WRT	C

Fig. 6-2 Circuit example

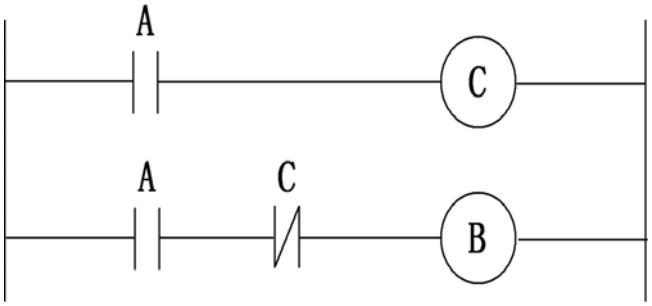

RD	A
WRT	C
RD	A
AND.NOT	C
WRT	B

Fig. 6-3 Circuit example

(1) Circuit of relay

The movement in the figures 6-2 and 6-3 are same. After connecting A, B and C connect, and then connect C, cut off B.

(2) GSK628G PLC program

In the figure 6-2, it is same with relay circuit. After connecting A, B and C connect, and pass PLC program for one cycle, cut off B.

PLC executes from the beginning of command sequence to the end. After finish command sequence, it executes from the beginning of the command sequence again. The execution time from the beginning to the end is abbreviated as cycle process period. The shorter the process time is, the stronger the signal of responding capacity is. PLC designing capacity is 500 steps which can be extended to 800 steps, so it takes processor just several milliseconds to execute all commands. All PLC program do not need to classify and can be completed in one cycle, and the scanning cycle takes only 10 milliseconds.

6.2 Input and output signal process

As the figure 6-4 shows, the input and output signal come from two parts, one is G and F signal which are for CNC actuator communication, and G represents NC signal which sent by PLC, refer to G address in 5.1 chapter. F represents the signal which NC actuator sends PLC signal; refer to F address in 5.2 chapter. The second is X and Y signal which is for machine communication, and X represents the signal which machine sends to PLC actuator, and it means input of machine and some relative status, refer to X address in 5.3 chapter. Y represents control signal which PLC actuator sends to machine, refer to Y address in 5.4 chapter. As figure 6-4 shows, it is PLC signal sketch map.

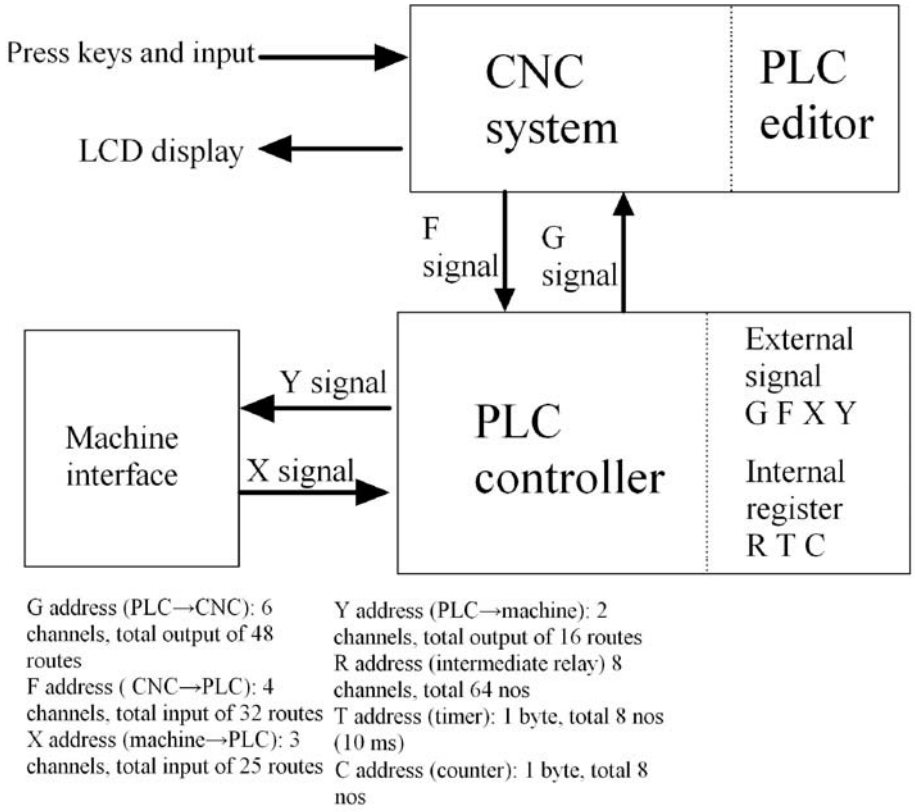

Fig. 6-4 Sketch map of PLC signals

6.3 Self-lock and interlock circuit

In sequence program, some signal should always remain valid, but signal of input point only provides a starting signal. If spindle motor switches on, usually only one single stable button can start in the machine switches, that's why the self-lock circuit is used. The user only gives one starting signal; the system locks the signals through PLC program to simplify the hardware. Besides, during sequential control, for safety, some signal which can not be valid at the same time should be interlocked.

In sequential control program, the necessary interlock should be adopted, and the relay control circuit of control cabinet in the machine side also should adopt hardware interlock. Because the sequence program in the software adopts interlock in the logic, however, the hardware of executing sequence program has default, and then the interlock is not working. Therefore, the control cabinet in the machine side through interlock can guarantee the safety of operator and prevent the damage of machine.

APPENDIX Ⅰ PITCH ERROR COMPENSATION

1 Function

Compensate the pitch errors of X and Z axes by the minimum moving unit.

2 Specifications

Take the mechanical origin as the compensation one, and input the parameter of compensation amount in each compensation interval which is set in the compensation axis.

(A) The axis can be compensated: X and Z axes.

(B) The compensation point number: X and Z axes, each axis has 256 points.

(C) The range of compensation amount

The range of compensation pulse number of each compensation point: -8000P~8000P.

(D) Compensation interval

Unit property	Minimum setting interval	Maximum setting interval	Unit
Metric system	1	65535	0.001mm

The actual compensation interval: in the above range, according to the maximum compensation range and mechanical limit, set the most appropriate value.

3. Setting parameters

Under the status of setting parameter, set the parameter of pitch error compensation through the following parameter setting methods.

3.1. Setting the origins of pitch errors

P	0	4	7	**X axis pitch error compensation origin**
P	0	4	8	**Z axis pitch error compensation origin**

The pitch error compensation origin is set by P047 which is in X axis and by P048 which is in Z axis. And the setting range is 0~255. Namely, the pitch error compensation origin in the position of the compensation list is set by the parameter.

3.2. Setting the pitch error compensation interval

P	0	4	9	**X axis pitch error compensation interval**
P	0	5	0	**Z axis pitch error compensation interval**

The pitch error compensation interval is set by P049 (X axis) and P050 (Z axis) and the setting input unit is 0.001mm (metric system).

Set the interval of pitch error compensation through two parameters, the setting range is the positive number from 1 to 65535. Besides, if the setting value is 0, it doesn't require compensating.

3.3 Setting the compensation amount

About each axis pitch error compensation amount, they are set according to the following table and X axis is taken as an example.

SERIAL NO. OF PARAMETER	SERIAL NO. OF COMPENSATION	COMPENSATION AMOUNT (NO. OF PULSE EQUIVALENCY)
P100	X000	-130
P101	X001	+50
P102	X002	-20
…	…	…
P355	X255	+90

The parameter number of X axis pitch error compensation amount is P100~P355,

The parameter number of Z axis pitch error compensation amount is P400~P655.

4 Setting examples of each parameter

（1）The origin of the pitch error is 0, and the compensation interval is 10.000.

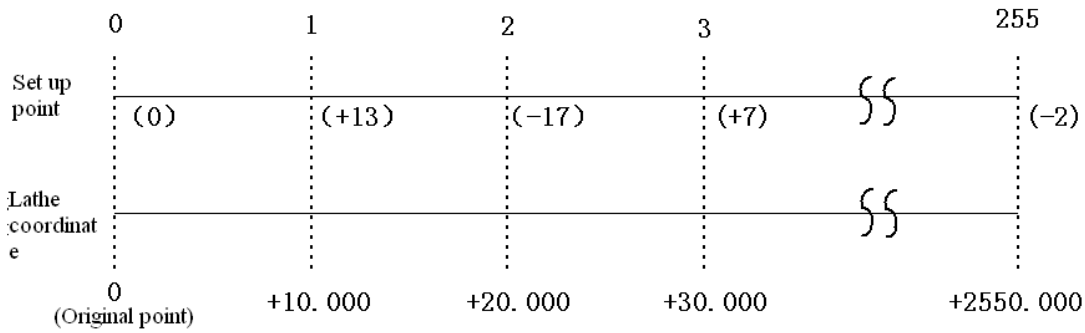

The beginning of compensation point corresponds to the origin of the pitch error compensation. The compensation point 1 corresponds to the position from the origin by 10.000 in the positive direction. Then, after each interval of 10.000, it corresponds to one compensation point, and the 225th compensation point is compensation amount 2550.000.

Therefore, in compensation point 1, it sets up the compensation amount of movement from 0 to 10.000. And in compensation point 2, it sets up the compensation amount of movement from 0 to 20.000. In compensation point N, it sets up the compensation amount which the compensation origin moves toward to N× (compensation interval).

（2） Origin of pitch error=127, compensation interval=20.000

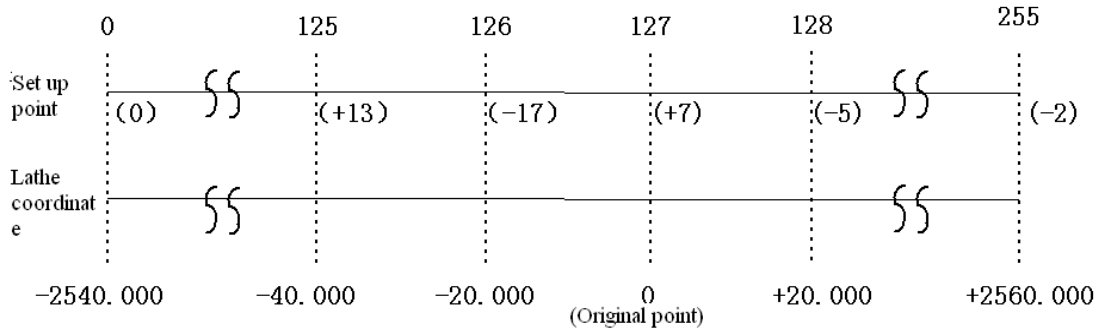

The 128th compensation point (127) in the compensation table corresponds to the origin, in which the 128th compensation point corresponds to 20.000 point at positive direction from the origin. Then, after each 20.000, the 255th compensation point is compensation amount 2560.000. But the compensation point 126 corresponds to 20.000 point at negative direction from the origin. The following each 20.000 point corresponds to one compensation point and the compensation point 0 is the compensation amount -2540.000, so compensation point N sets the compensation amount that (N-127), from compensation origin, **X** the compensation interval.

（3） The origin of the pitch error=255, compensation interval=10.000.

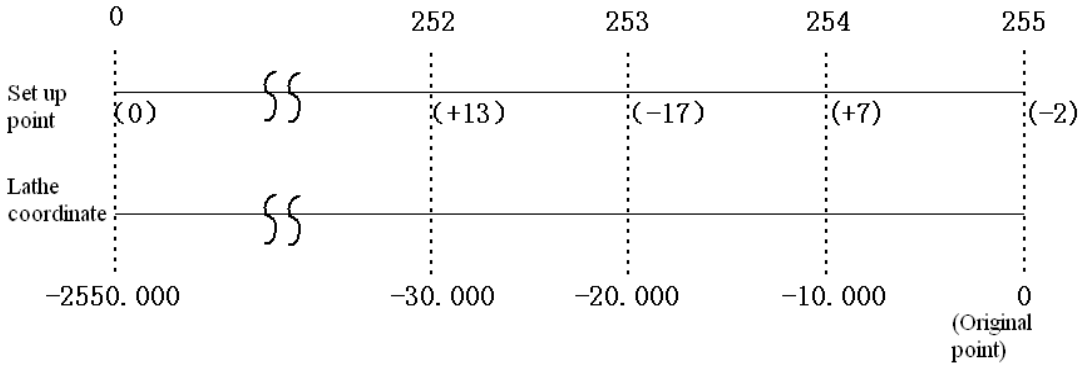

The last position of compensation table corresponds to the origin. The compensation point 254 corresponds to the point 10.000 from origin at the negative direction. The next each -10.000 corresponds to one compensation point and compensation point 1 is the compensation amount -2540.000. Therefore, the compensation point 255 should set the compensation amount from 0 to -10.000; the compensation point 254 should set the compensation amount from 0 to -20.000 and the compensation point N should set the compensation amount that (N-255), from the compensation origin, **X** the compensation interval.

5. Setting method of compensation amount

As the above chapter states, the compensation amount setting is related to the following factors.

- The positional relations between origin and compensation point;
- Mechanical moving position;
- Compensation interval;

（1） Enter parameter setting menu and move the cursor to ***X axis pitch error compensation***.

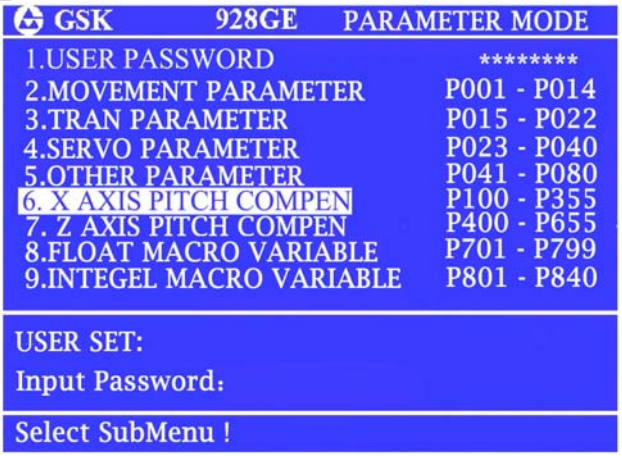

（2） Press ENTER , it can come into the setting interface of X axis pitch error compensation amount.

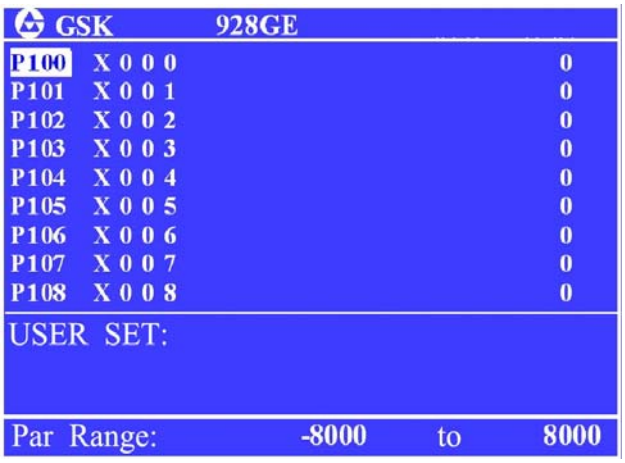

Press INPUT and input the number of the pulse equivalence to compensate the pitch error.

Press ENTER the first point of pitch error compensation amount in the X axis can be set.

The setting notes:

1）The setting of compensation interval depends on parameter P049 in X axis and P050 in Z axis. When the compensation interval is 0, the axis can not compensate.

2）The pitch error compensation is executed based on the pulse equivalence (the compensated length value is optional) and the conversion between length and pulse equivalence should be conducted before setting the pitch error compensation amount.

3）After setting the parameter of pitch error, it must return to the mechanical zero point.

REMARK

1. The parameters affect the pitch error compensation, which include pitch of guide screw, backlash, gear ratio, compensation origin and interval, therefore, the parameter which has been rewritten must be reset, then, it can come into effect.

2. The input of pitch error compensation is the difference between the actual pulse value of

current position and theoretical pulse value of current position. The relation of gear ratio doesn't take into consideration during input, but the input value is changed according to the different actual usage method and measuring method.

3. The third positional axis in the additional function doesn't provide the pitch error compensation.

APPENDIX Ⅱ LIST of PROGRAM EDITING MISTAKES

SR.NO	REMINDING INFO	REMARK	TROUBLE SHOOTING
1	Lack of line number	Lack of serial number at the starting position of block	Input correct serial number
2	Illegal line number	Mistakes of serial number of block	Input correct serial number
3	Illegal field	The field can not identify in the block	Delete or rewrite the field
4	Command conflict	The command can not share with the segment in the block	Delete the extra commands
5	Illegal commands	The command without definition in the block	Input correct command
6	Parameter repeat	Repeatedly input uniform parameter in the block	Delete repeated parameter
7	Illegal parameter	The value of parameter exceeding the limit	Input correct parameter value
8	Parameter ignore	Lack of the necessary parameter item in the block	Input complete command parameter item
9	Parameter conflict	Parameter item conflict in the block	Delete conflict parameter item
10	Line number repeat	Many jumping target program number	Rewrite repeat serial number
11	Embedding too much	Too many times of calling embedded subprogram	Reduce times of calling embedded program
12	Mistakes in subprogram	Mistakes writing or editing of subprogram	Rewrite or edit the subprogram again
13	Lack of instruction	Lack of program stop code	Add up program stop code
14	Lack of returning	Lack of corresponding command or parameter	Supply complete corresponding item
15	Illegal branch	Branch commands cause dead cycle	Rewrite branch commands
16	Editing overflow	Too big program cause overflow from editing area	Divide big programs into small programs
17	Mistakes in editing area	Mistakes in content of editing area	Rewrite the program
18	Calculation mistakes	Mistakes in circular	Calibrate the corresponding parameter item of circular arc

APPENDIX Ⅲ PLC COMMAND LIST

1. Basic command table

SR.NO	COMMAND	INTRODUCTION
1	RD	Read in the specified signal value and save in ST0.
2	RD．NOT	Read in the specified signal value, take the inverse value and save in ST0.
3	WRT	Output the calculation result which is the value of ST0 to the specified address.
4	WRT．NOT	Take the inverse value of the calculation result which is the value of ST0 and output to the specified address.
5	AND	Logic and (multiplication) calculation. Evaluate the logic and calculation of specified signal value and current value (ST0).
6	AND．NOT	Take the inverse value of specified signal value and evaluate the logic and calculation of the inverse value and current value (ST0).
7	OR	Logic or (addition) calculation. Evaluate the logic or calculation of specified signal value and current value (ST0).
8	OR．NOT	Take the inverse value of specified signal and evaluate the logic or calculation of the inverse value and the current value (ST0).
9	RD．STK	Move the content of register to left by one digit and save the signal value of specified address to ST0.
10	RD．NOT．STK	Similar like RD.STK, first take the inverse value of the specified address and save in ST0.
11	AND．STK	Save the result of ST0 and ST1 in ST1, and stored register moves to right by one digit.
12	OR．STK	Save the result of ST0 or ST1 in ST1, and the stored register moves to right by one digit.

2. Functional command table

SR.NO	COMMAND	INTRODUCTION
1	TMR	Specified timer
2	CTR	Specified counter
3	#	The initialization of timer or counter
4	END	PLC program end

APPENDIX Ⅳ STANDARD PLC EXAMPLES (V2.0)

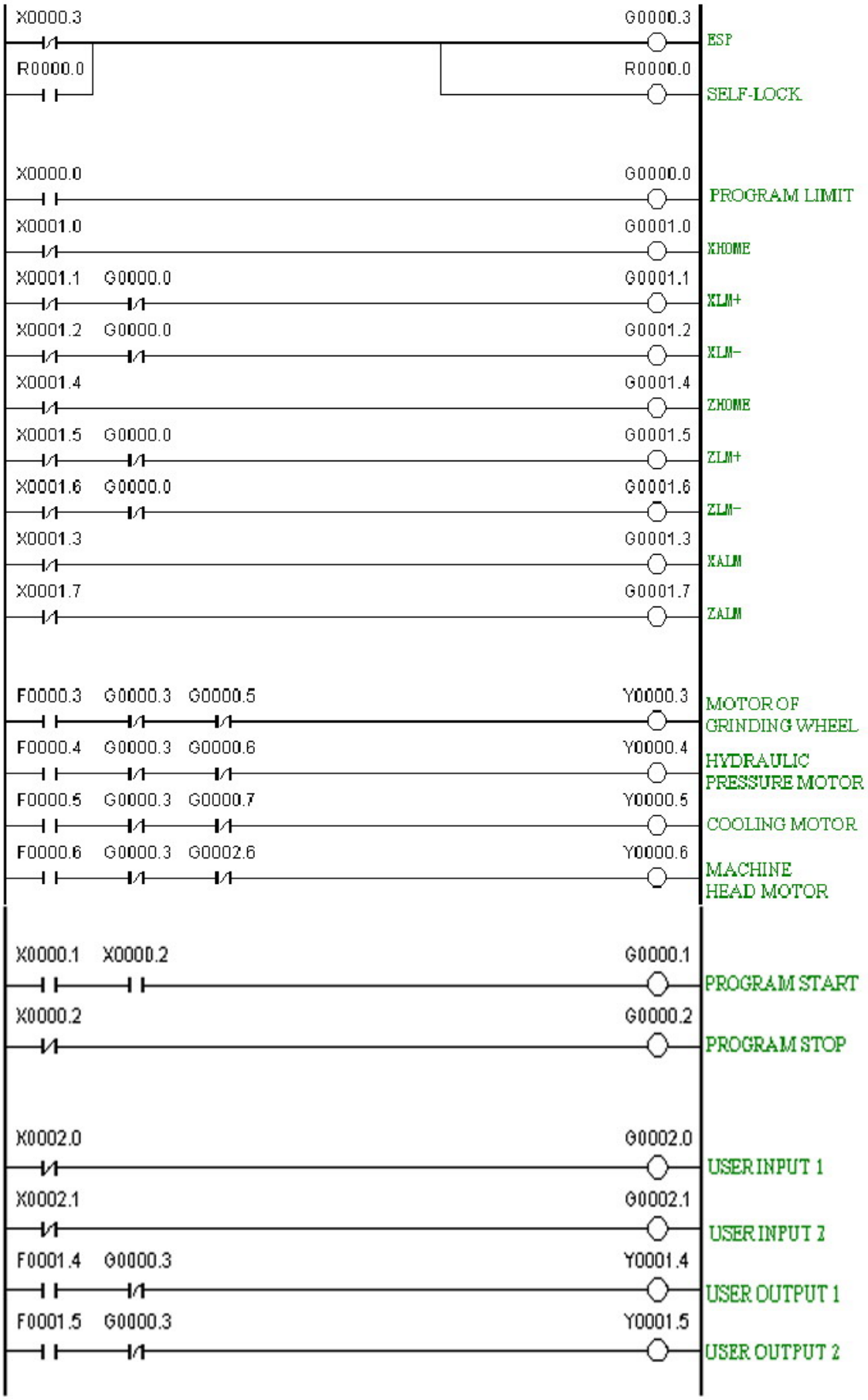

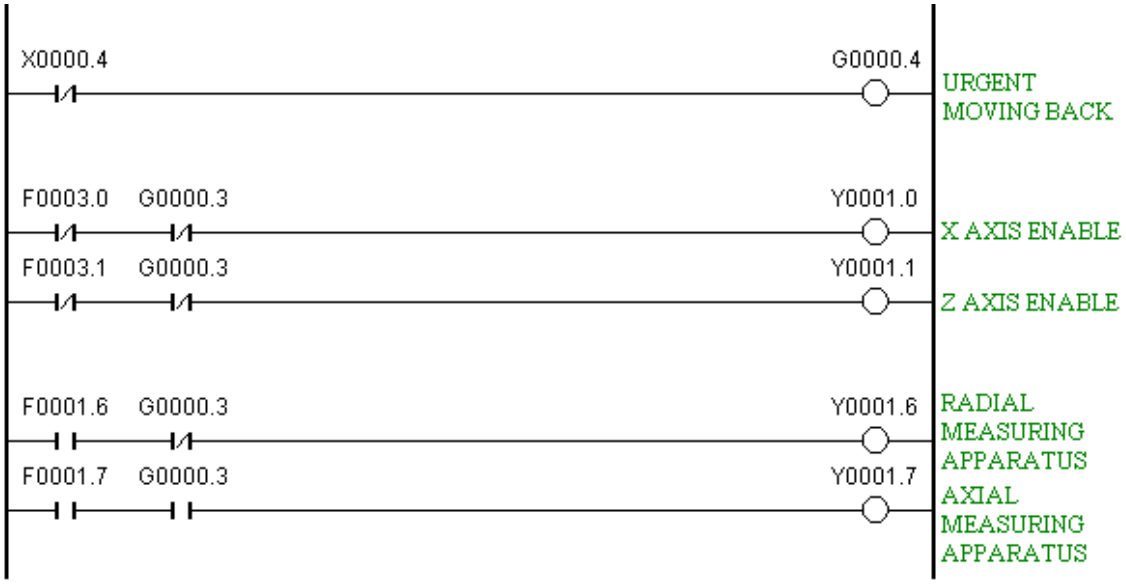
X0000.4
G0000.4
URGENT MOVING BACK
F0003.0
G0000.3
Y0001.0
X AXIS ENABLE
F0003.1
G0000.3
Y0001.1
Z AXIS ENABLE
F0001.6
G0000.3
Y0001.6
RADIAL MEASURING APPARATUS
F0001.7
G0000.3
Y0001.7
AXIAL MEASURING APPARATUS

LINE NO	COMMAND	ADDRESS	REMARK
001	RD.NOT	X0.3	Declare ESP "normally closed" contact and self-lock signal of emergency stop
002	OR	R0.0	
003	WRT	G0.3	
004	WRT	R0.0	
005	RD	X0.0	Declare "normally open" contact of program limit
006	WRT	G0.0	
007	RD.NOT	X1.0	Declare XHOME "normally closed" contact
008	WRT	G1.0	
009	RD.NOT	X1.1	Declare XLIMIT + "normally closed" contact
010	AND.NOT	G0.0	
011	WRT	G1.1	
012	RD.NOT	X1.2	Declare XLIMIT—"normally closed" contact
013	AND.NOT	G0.0	
014	WRT	G1.2	
015	RD.NOT	X1.4	Declare ZHOME "normally closed" contact
016	WRT	G1.4	
017	RD.NOT	X1.5	Declare ZLIMIT + "normally closed" contact
018	AND.NOT	G0.0	
019	WRT	G1.5	
020	RD.NOT	X1.6	Declare ZLIMIT— "normally closed" contact
021	AND.NOT	G0.0	
022	WRT	G1.6	
023	RD.NOT	X1.3	Declare " normally closed" contact of X axis drive alarm
024	WRT	G1.3	
025	RD.NOT	X1.7	Declare "normally closed" contact of Z axis drive alarm
026	WRT	G1.7	
027	RD	F0.3	Start the grinding wheel spindle motor statements
028	AND.NOT	G0.3	
029	AND.NOT	X0.5	
030	WRT	Y0.3	
031	RD	F0.4	Start the hydraulic pressure motor statements
032	AND.NOT	G0.3	
033	AND.NOT	X0.6	
034	WRT	Y0.4	
035	RD	F0.5	Start the cooling motor statements
036	AND.NOT	G0.3	
037	AND.NOT	X0.7	
038	WRT	Y0.5	

LINE NO	COMMAND	ADDRESS	REMARK
039	RD	F0.6	Start headstock machine statements *
040	AND.NOT	G0.3	
041	AND.NOT	X2.6	
042	WRT	Y0.6	
043	RD	X0.1	Program "cycle start" statements
044	AND	X0.2	
045	WRT	G.0.1	The statements of "cycle start" in the
046	RD.NOT	X0.2	The statements of "stop" in the program
047	WRT	G0.2	
048	RD	X2.0	Declare user input 1 as "normally closed" contact
049	WRT	G2.0	
050	RD	X2.1	Declare user input 2 as "normally closed" contact
051	WRT	G2.1	
052	RD	F1.4	Declare user input 1 as "normally open" contact
053	AND.NOT	G0.3	
054	WRT	Y1.4	
055	RD	F1.5	Declare user output 2 as "normally open" contact
056	AND.NOT	G0.3	
057	WRT	Y1.5	
058	RD.NOT	X0.4	Urgent retraction signal
059	WRT	G0.4	
060	RD.NOT	F3.0	X drive enable signal control
061	AND.NOT	G0.3	
062	WRT	Y1.0	
063	RD.NOT	F3.1	Z drive enable signal control
064	AND.NOT	G0.3	
065	WRT	Y1.1	
066	RD	F1.6	Radial direction measuring instrument control
067	AND.NOT	G0.3	
068	WRT	Y1.6	
069	RD	F1.7	Axial direction measuring instrument control
070	AND.NOT	G0.3	
071	WRT	Y1.7	
072	END		End statements of PLC program
073			

APPENDIX Ⅴ INTRODUCTION of MEASURING INSTRUMENT

The application of the measuring instrument during grinding is extensive, it can check the dimensions of various workpiece conveniently through the measuring device, then improve the machining efficiency obviously, and reduce the labor intensity and rejection rate. CNC system and the various measuring instrument can communicate through the input and output ports, and feed back through the dimension signal of measuring instrument, and skip the program in real time and control the machining accurately.

1. The introduction about measuring instrument interface signal of 928GE grinding machine CNC system:

The distribution table of machine input and output interface is shown in the following figure:

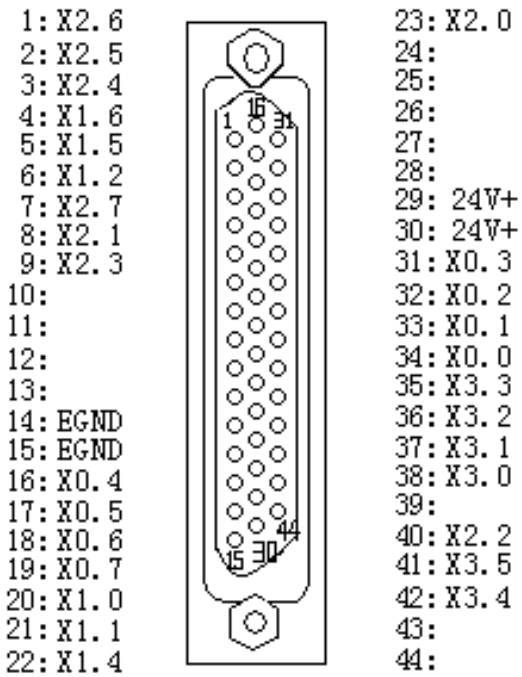

Definition of input interface

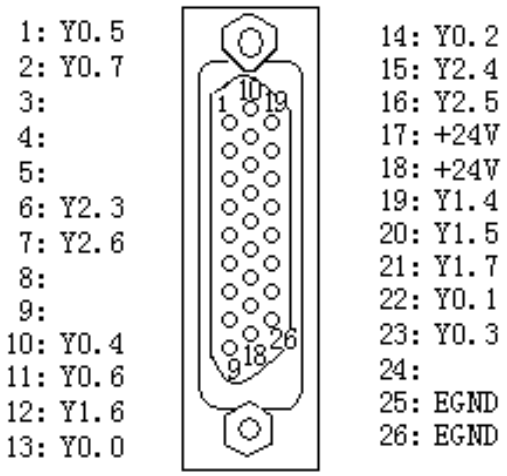

Definition of output interface

Among them, because the dimension signal of measuring instrument (measuring instrument==>928GE) needs responding at a high speed, therefore, these signals should be fixed at X2 byte, and the finish grinding and grinding can process quickly at the same time and corresponds to the two input interfaces at high speed, and conduct the rough grinding, semi-rough grinding input process correspondingly. The user should guarantee the correct connection of signal point. However, the control signal of measuring instrument (928GE==>measuring instrument) can be processed as the common output signal of system and the example is below:

Corresponding control signals

X2.2 Measuring instrument signal point 1	(Measuring instrument==> 928GE) P1
X2.3 Measuring instrument signal point 2	(Measuring instrument==> 928GE) P2

X2.4 Measuring instrument signal point 3 (Measuring instrument==> 928GE) P3

X2.5 Measuring instrument signal point 4 (Measuring instrument==> 928GE) P4

Y1.6 Control signal of measuring instrument1 (928GE ==>measuring instrument)

Y1.7 Control signal of measuring instrument2 (928GE ==>measuring instrument)

24V：Power supply of interface signal

0V ：GND of interface signal

The introduction about the application of main function of the measuring instrument:

（a）Set Z axis position in the face of measuring instrument and cutter

In order to eliminate the coordinate difference of Z axis coordinate due to the different depth of central hole, it can use the end measuring instrument to measure on-line, automatic calculate the start position of machining, which is shown in the following figure: when the probe touches the face of workpiece, the system stops running temporarily, automatic saves the coordinate position of Z axis, then guide the grinding wheel to set the position in Z axis.

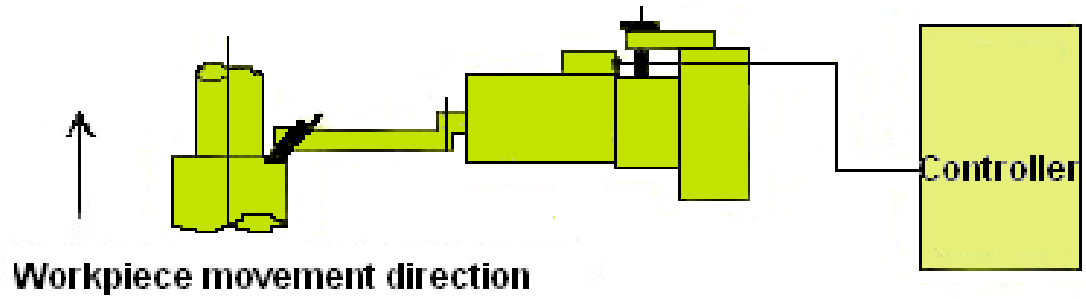

Calculate the macro variables:

The Z axis positional difference between memory probe and grinding wheel (through trial grinding or measuring): # 0 5 0 is specified by user;

The system memorizes the current Z axis position through evaluation instruction: # 0 6 0 is specified by user;

The system should set the position of face: # 0 5 1 is specified by user;

0 5 1= # 0 5 0 + # 0 6 0;

（b）Measuring dimension of radial measuring instrument:

Active measuring during machining

Pre-set the dimension data of each output point, refer to the introduction of the measuring instrument usage. After starting the measuring instrument, the measuring instrument automatic checks the dimension of workpiece and guide system to grind. As the following figure shows: the user set the dimension data of point 1, 2 and 3, the system grinds in each stage respectively based on the input signal of these signal points.

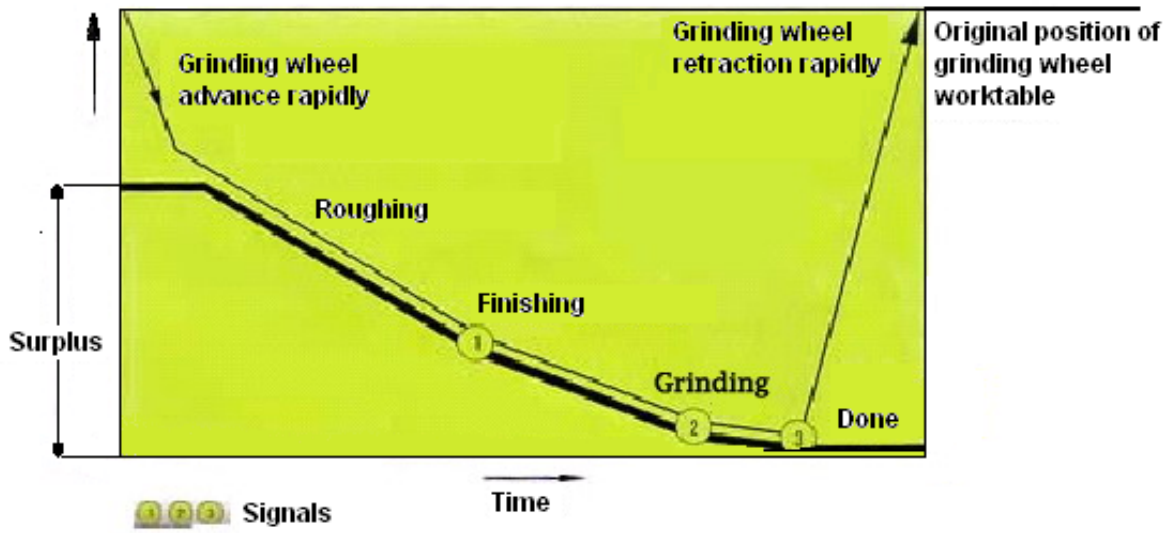

2. The usage of relative M command and G instruction

The M commands are for controlling the measuring device entering or exit the measuring position, which is shown as following:

M70: Measuring instrument (radial direction), the measuring device enters measuring stage;

M75: Measuring instrument (radial direction), the measuring device exits measuring stage;

M78: Measuring instrument (face), the measuring device enters measuring stage;

M79: Measuring instrument (face), the measuring device exits measuring stage;

The measuring instrument specified grinding command G31:

Format：G31 G01 X_ Z_ P_ F_

Among them：

X— X axis coordinate, unit: mm.

Z— Z axis coordinate, unit: mm.

P— the measuring signal point, Px corresponding to the signal point x of measuring instrument.

F— feedrate, unit: mm/min.

Function

During grinding, check the specified external jumping signal and break off the current command line, then execute the command of next program line. The control signal of the measuring instrument can control the measure or external jump during circular cutting,

2. The points for attention about using G31 to set the allowance

When use measuring instrument to measure and G31 command to realize the jump function, even system responds very rapidly, there still exits a dwell time during instrument sending and system receiving and processing, therefore, there should leave some surplus when use instrument to measure and jump.

APPENDIX Ⅵ COMMUNICATION SOFTWARE

928G CNC system of grinding machine uses unified communication software, and realizes a machining program from PC to CNC system or upload (CNC—>PC) and download (PC—>CNC) between PLC user programs or function of browsing and editing corresponding programs through the serial port. Temporarily, only Windows version is available.

1 Uploading and downloading programs

Firstly, guarantee the connection of serial port communication cable between PC and CNC system is OK, switch on the system and input the correct password, and switch to the working mode which is required to communicate: NC machining program in Edit mode; PLC in Diagnosis mode.

Steps of downloading program of CNC system:

（1）Opening communication software is shown in the following figure:

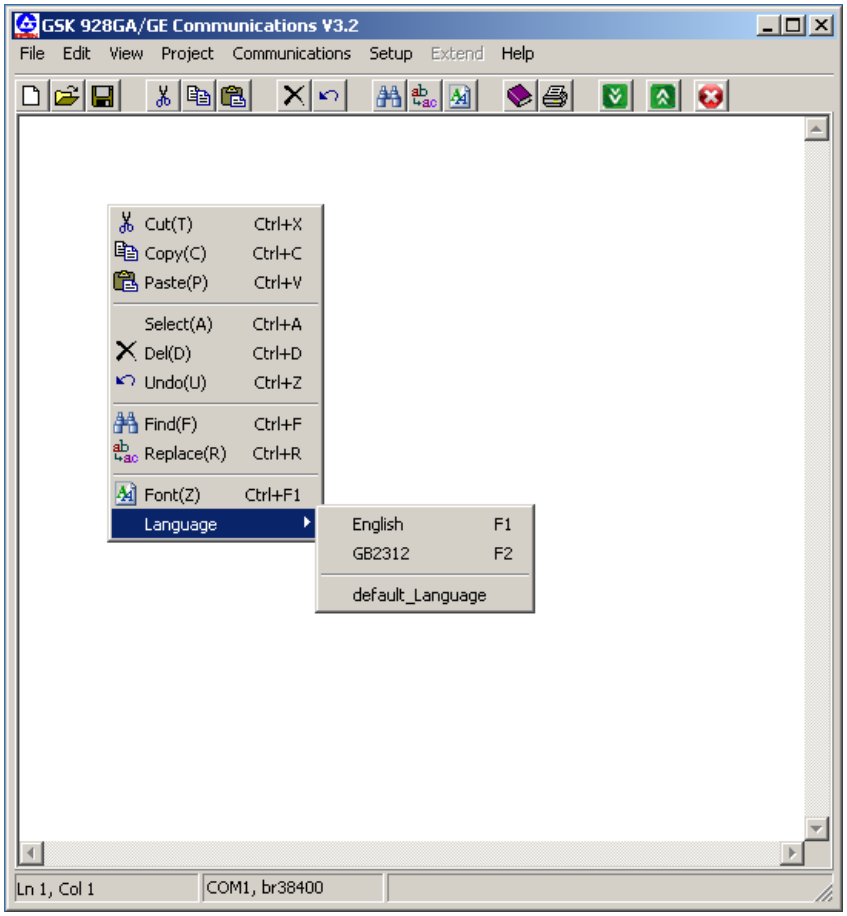

（2）Open the files which should be sent, and click "start sending".

（3）In the corresponding working mode of CNC system, press M R and remind Receiving ready!, and then press ENTER , the system reminds Receiving…… , and begin to receive the program, and the receiving time depends on the length of program. The system reminds finishing until the receiving completes.

（4）If the system finds the program name is same as that of original one during receiving the machining program, the system stops receiving and reminds the name is same as that of original one, after renaming, sending starts, again.

（5）During receiving, press ESC and cut off the receiving.

The steps of uploading the program:

（1）Open communication software, click "start receiving".

（2）If sending part program requires in editing mode, select the part program which should be output; if it does not require, no need to select.

（3）Press Z W , CNC system reminds Sending ready! And then press ENTER to remind Sending…, and then begin to send program, after complete sending, it reminds Sending completes!

（4）During sending, the system can cut off sending through pressing ESC .

2. Switching a ladder diagram into PLC program (list of statements)

Opening the ladder diagram and editing software is shown as the following figure:

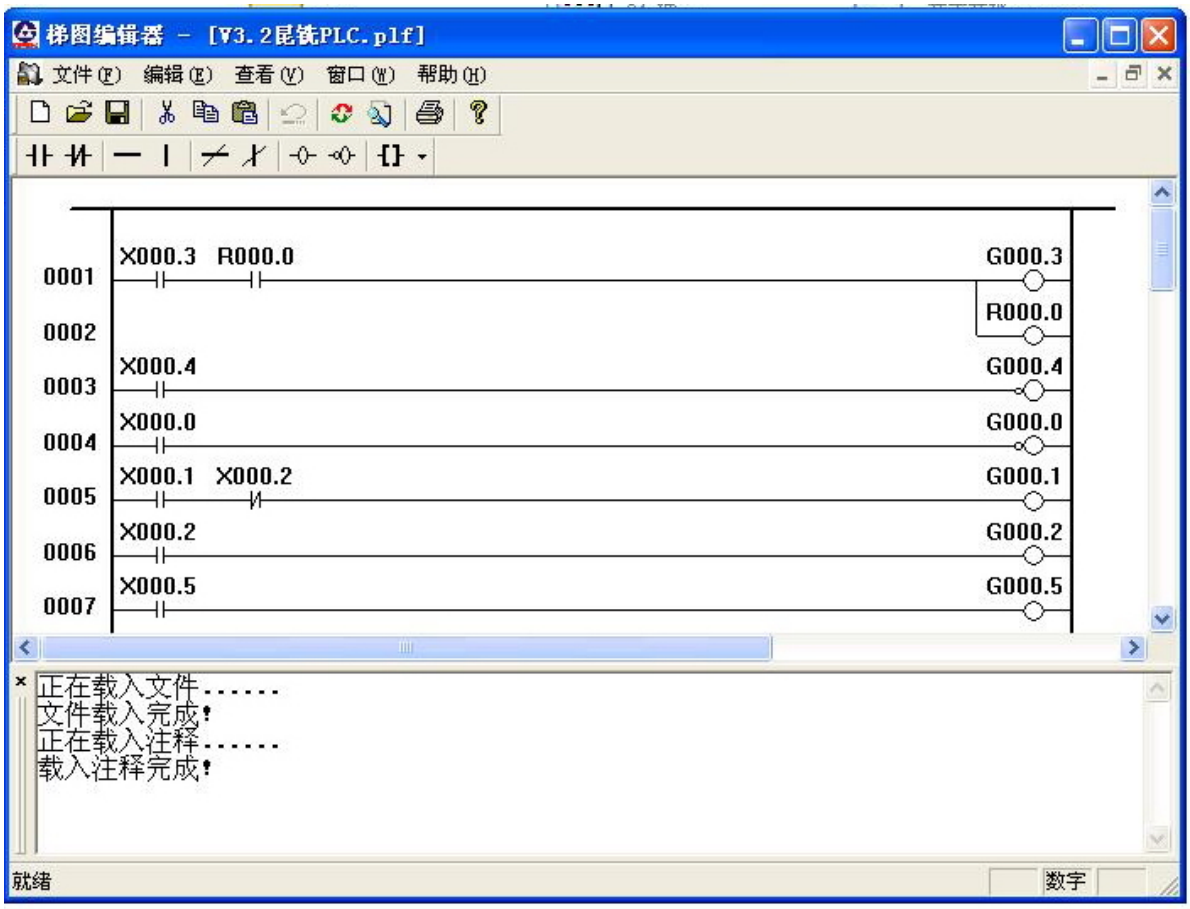

Operational steps:

(1) Complete editing ladder diagram of corresponding function through editor, pleaser refer to ladder diagram operation help;

(2) Select editing status, select "switch", and the right side of ladder diagram switches to corresponding PLC statements;

(3) Select file status, select "generating command list file" and save;

(4) Open communication software, search the command file which just switched, and click sending, the system receives it.